Failure Literacy: The Landmark Structural Failures You Should Know About

Norbert Delatte, P.E., Ph.D.

M.R. Lohmann Endowed Professor of Engineering and Head, School of Civil and Environmental Engineering

Oklahoma State University

Structural Engineering

- “The art of moulding materials we do not really understand into shapes we cannot really analyze, so as to withstand forces we cannot really assess, such a way that the public does not really suspect.”
  - E. H. Brown
- Also applied to geotechnical engineering, etc.

Failure

- An unacceptable difference between expected and observed performance
- Involves functional failures as well as collapses

Failure Literacy

- Knowledge of well known failure case histories
- Understanding of causes behind failures
- Recognition of patterns of failures
- Understanding of role of failure in development of design procedures and codes
- Skepticism

Engineering Design

- Selecting materials, systems, and configurations in order to ensure satisfactory performance over the projected lifetime of the facility

Delatte's Simplified Definition

- Anticipate everything that can possibly go wrong
- Make sure it doesn't happen
- But remember… engineering is the art of doing for $ 1 what any idiot could do for $ 2

New ASCE Code of Ethics

- New version approved by the ASCE Board of Direction on October 26, 2020
- Hierarchical – 1. Society
- 1 a. first and foremost, protect the health, safety, and welfare of the public;
- c. express professional opinions truthfully and only when founded on adequate knowledge and honest conviction;
- h. consider the capabilities, limitations, and implications of current and emerging technologies when part of their work; and
- i. report misconduct to the appropriate authorities where necessary to protect the health, safety, and welfare of the public.

New ASCE Code of Ethics

- 3. Profession
- a. uphold the honor, integrity, and dignity of the profession;
- b. practice engineering in compliance with all legal requirements in the jurisdiction of practice;
- c. represent their professional qualifications and experience truthfully;
- g. continue professional development to enhance their technical and non-technical competencies.

New ASCE Code of Ethics

- 4. Clients and employers
- a. act as faithful agents of their clients and employers with integrity and professionalism;
- b. make clear to clients and employers any real, potential, or perceived conflicts of interest;
- c. communicate in a timely manner to clients and employers any risks and limitations related to their work;
- d. present clearly and promptly the consequences to clients and employers if their engineering judgment is overruled where health, safety, and welfare of the public may be endangered;
- f. perform services only in areas of their competence; and
- g. approve, sign, or seal only work products that have been prepared or reviewed by them or under their responsible charge.

New ASCE Code of Ethics

- 5. Peers
- c. foster health and safety in the workplace;
- d. promote and exhibit inclusive, equitable, and ethical behavior in all engagements with colleagues;
- h. comment only in a professional manner on the work, professional reputation, and personal character of other engineers; and
- i. report violations of the Code of Ethics to the American Society of Civil Engineers.

12 Cases – BSCES Lecture 2005

- Quebec*
- Tacoma Narrows
- Point Pleasant
- Ronan Point*
- 2000 Commonwealth Ave*
- Bailey's Crossroads
- Hartford Civic Center*
- Willow Island
- Harbor Cay Condominium*
- Hyatt Regency
- Mianus River Bridge
- L'Ambiance Plaza

Some Landmark Structural Failures

Year	Case
1907	Quebec Bridge (Canada)
1940	Tacoma Narrows Bridge
1967	Point Pleasant/ Silver Bridge
1968	Ronan Point
1971	2000 Commonwealth Avenue
1973	Skyline Plaza/ Bailey's Crossroads
1978	Hartford Civic Center
1978	Willow Island power plant cooling tower
1981	Harbour Cay Condominium
1981	Hyatt Regency walkways
1983	Mianus River Bridge
1987	L'Ambiance Plaza

New Cases

- Minneapolis I-35 bridge collapse
- Laval Quebec de la Concorde bridge collapse
- Genoa Morandi bridge collapse
- FIU pedestrian bridge collapse
- Sadly, always new material…

The Collapse of the Quebec Bridge – 1907

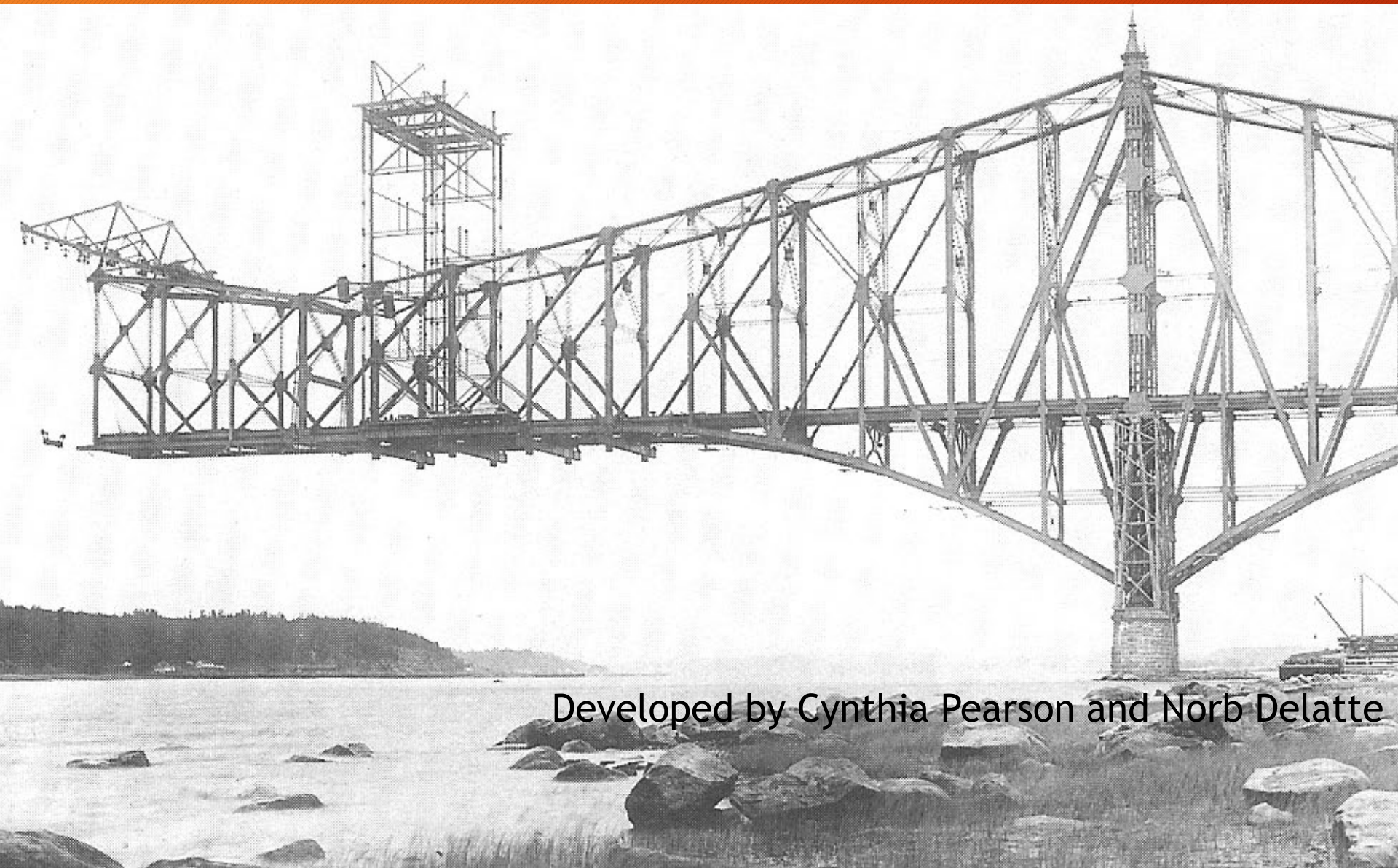

Developed by Cynthia Pearson and Norb Delatte

Introduction

- Throughout 19th and early 20th centuries, new bridges critical for economic development
- Collapse on August 29, 1907, killed 75 workers
- Quebec Bridge would have been the longest cantilever structure of its day

Design and Construction

- Quebec Bridge Company formed in 1887
- Financially troubled
- Cooper hired as project consulting engineer, attempted to supervise project from New York

Theodore Cooper

- Independent consultant from New York, 60 years old, poor health
- Wrote award winning paper pioneering use of steel for bridges
- Prepared specifications for iron and steel bridges
- Developed widely used method of accounting for railroad loads

Design and Construction

- Cooper selects Phoenix Bridge design as “best and cheapest”
- Increases span from 1,600 to 1,800 ft. to reduce pier cost, also will make bridge world’s longest cantilever
- Cooper allowed high tensile and compressive stresses

Allowable Stress Comparison

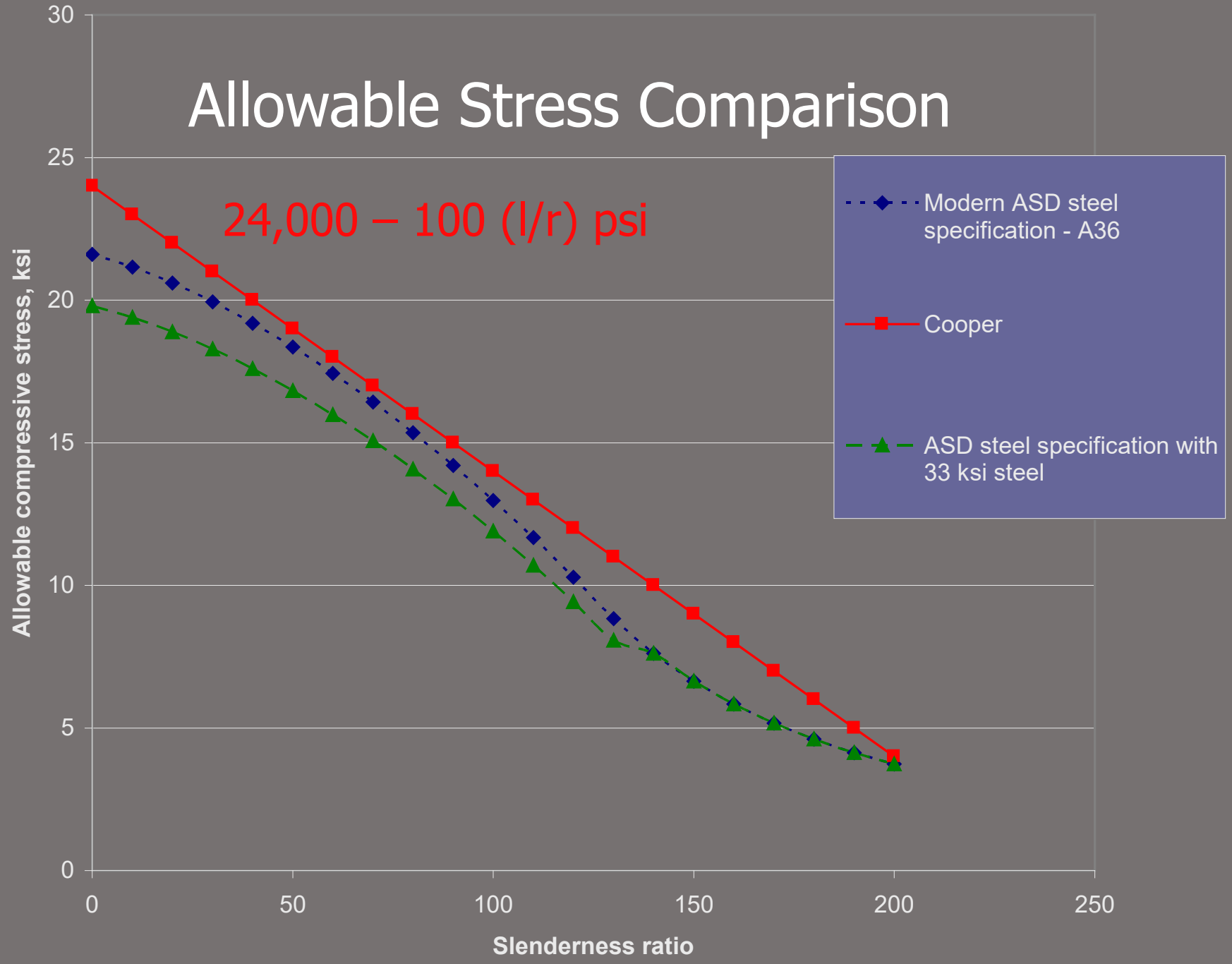

The Compression Chords

Member Cross-Section

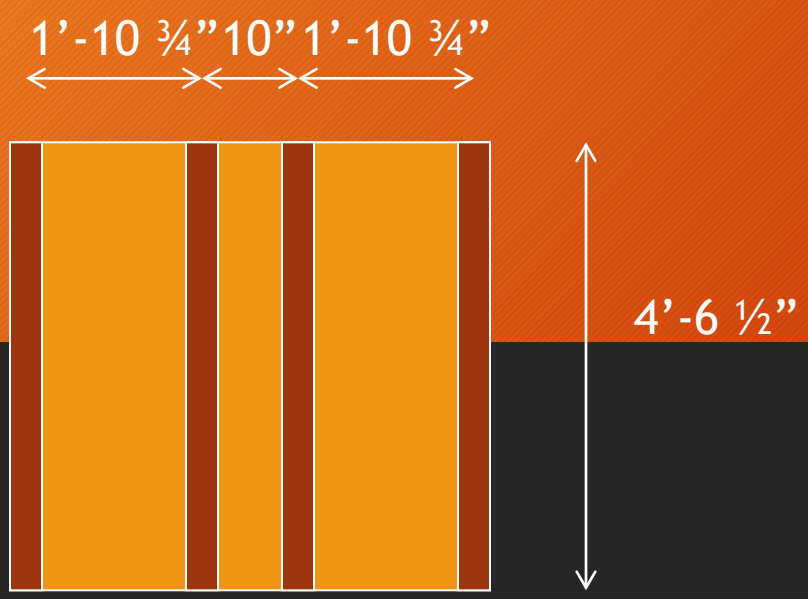

Each rib made of 4 15/16” plates

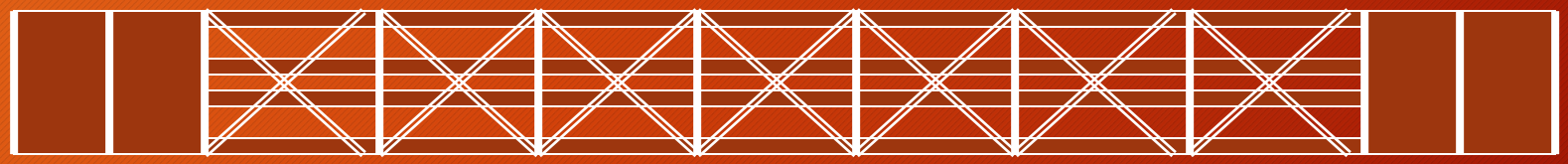

Overall dimensions about 5.5 by 4.5 ft., 4 inch plates

Design and Construction

- Financial constraints a constant concern
- Very limited testing, limited design work
- Dead loads were not adjusted
- Cooper stayed in New York, left on site supervision to inexperienced engineers
- Cooper defeated an attempt to review design
- Compression members showed increasing distortion

Bridge Member Deflections

Date of Observation	Deflecting Chords	Amount of Deflection
June 15	A5L & A6L	1/16” to 1/4"
June	A3R & A4R	1/16” to 1/4"
June	A7R & A8R	1/16” to 1/4"
June	A8R & A9R	1/16” to 1/4"
June	A8L & A9L	3/4"
August 6	7L & 8L	3/4"
August	8L & 9L	5/16"
August 20	8R	bent
August	9R & 10R	-------
August 23	5R & 6R	1/2"
August 27	A9L	2-1/4"

Collapse

- By August 27, member A9L had bowed 2 ¼ inches
- Cooper informed, cabled to stop work on August 29
- Bridge collapsed that afternoon

Locations of Members After Collapse

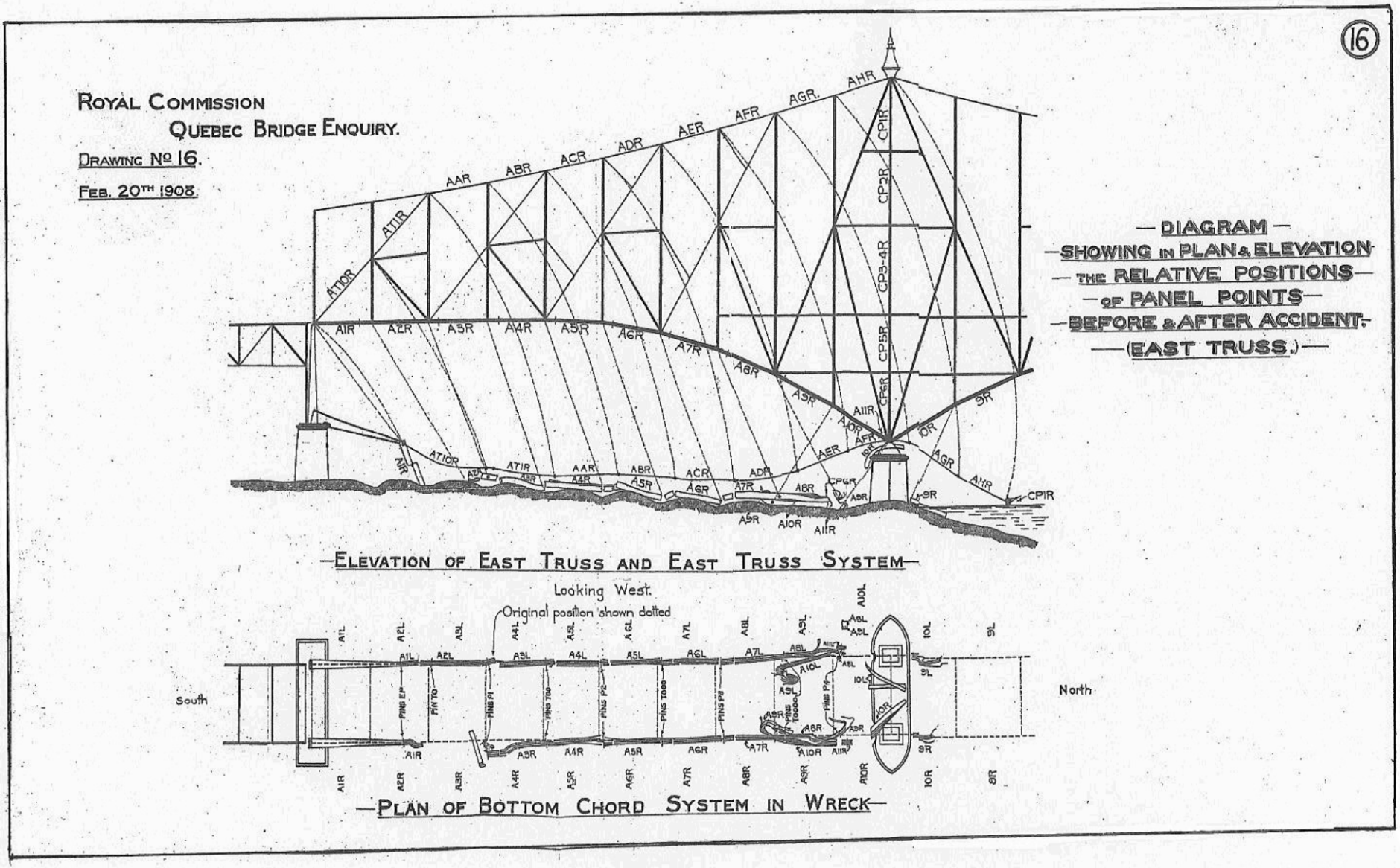

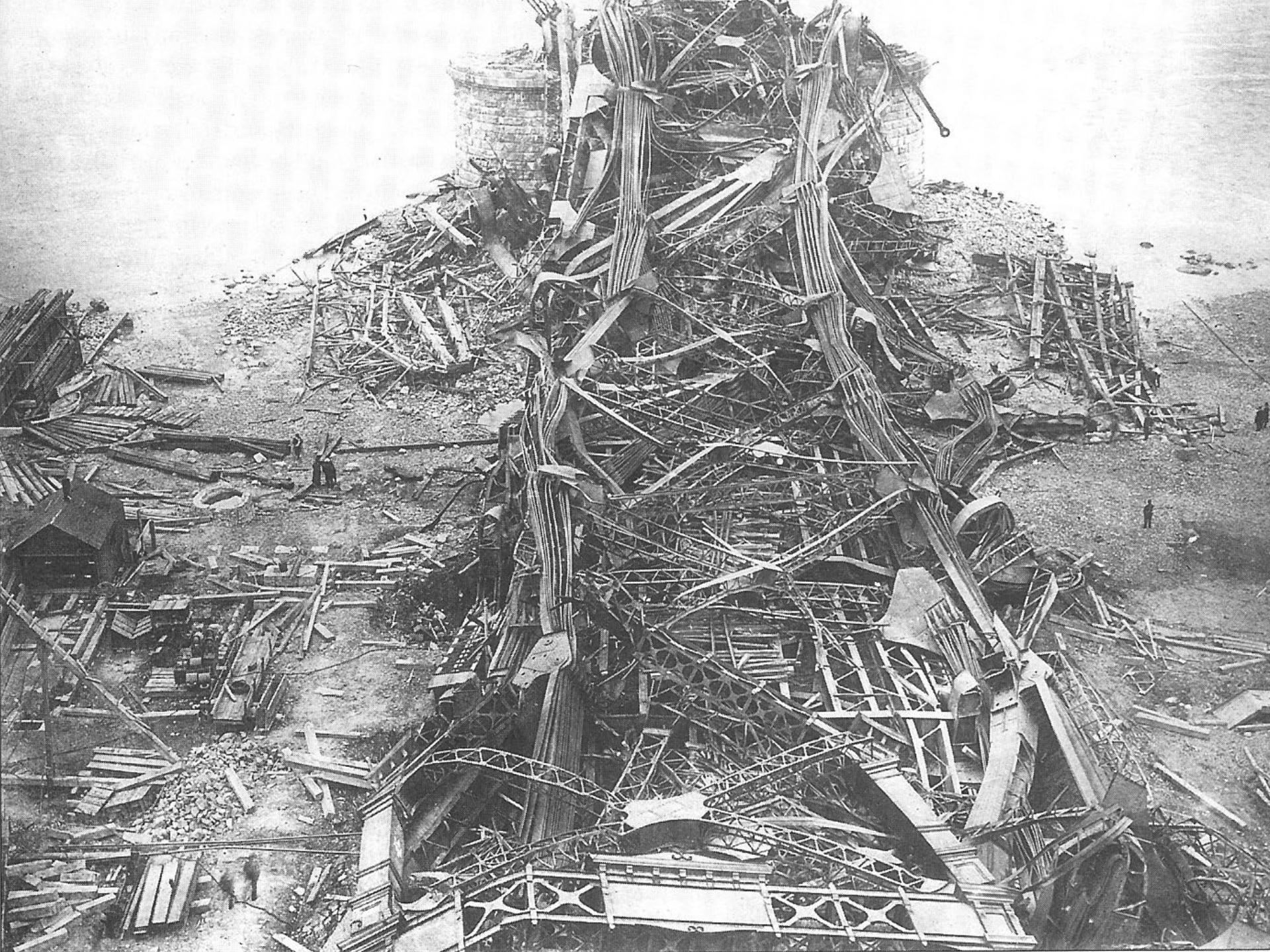

Cause of Failure

- Technical cause was failure of compression chords A9L and A9R
- Failure either by rupture of latticing or shearing of lattice rivets
- Weight of material delivered to site exceeded dead load estimates

Dead Load Increases

QUEBEC BRIDGE—SOUTH HALF.

STATEMENT SHOWING COMPARISON OF ACTUAL WEIGHTS AND WEIGHTS FIGURED FROM COMPLETED DRAWINGS.

Order No.	Description.	Figured Weight.	Total.	Actual Weight.	Total.
		Lbs.	Lbs.	Lbs.	Lbs.
602	Anchorage eyebars and pins	219,829		223,100	
604	Anchor shells and bracing	374,697		371,843	
	Anchorage	.....	594,526	.....	594,943
606	Anchor arm trusses	8,085,621		8,142,803	
608	Anchor arm eyebars	3,188,361		3,209,014	
610	Anchor arm pins	229,058		229,255	
	Anchor arm truss system	.....	11,503,040	.....	11,581,072
613	Anchor arm floor beams and stringers	1,507,140		1,517,036	
618	Anchor arm trusses floor beams	260,832		261,510	
	Anchor arm floor system	.....	1,767,972	.....	1,778,546
612	Centre posts and bracing	2,676,863		2,708,560	
614	Shoes and pedestals	808,810		814,349	
	Centre post system	.....	3,485,673	.....	3,522,909
621	Cantilever arm trusses	8,602,086		8,724,598	
623	Cantilever arm eyebars	3,467,005		3,468,253	
625	Cantilever arm pins	330,220		329,584	
	Cantilever arm truss system	.....	12,399,311	.....	12,522,435
627	Cantilever arm floor beams and stringers	1,732,290		1,770,892	
629	Cantilever arm trussed floor beams	290,435		296,206	
	Cantilever arm floor system	.....	2,022,725	.....	2,067,098
631	Suspended span trusses	3,307,590		3,379,293	
633	Suspended span eyebars	342,340		343,280	
635	Suspended span pins	35,710		35,460	
	Suspended span truss system	.....	3,685,640	.....	3,758,033
637	Suspended span floor beams and stringers	1,197,365	1,197,365	1,214,905	1,214,905
	For one-half of the bridge	36,656,252		37,039,941	
	The whole bridge	.....	73,312,504	.....	74,079,882

Actual weight in excess of weight estimated from drawings, 767,378 pounds.
Percentage of errors, 1.03 per cent.
Actual weight is 101.05 per cent of figured weight.
Figured weight is 98.95 per cent of actual weight.

SEPTEMBER 25th, 1907.

Comparison of Actual and Assumed Dead Loads

Element	Assumed Dead Load		Actual Dead Load		Inc.
	kN	lb.	kN	lb.	%
Half suspended span	21,538	4,842,000	25,328	5,694,000	17.6
Cantilever arm	58,740	13,205,200	70,300	15,804,000	19.7
Anchor arm	59,240	13,317,600	77,034	17,318,000	30.0

Professional and Procedural Aspects

- Royal Commission of Inquiry assigned blame to Cooper, consulting engineer, and Szlapka, design engineer
- Errors cited by commission
  - Cavalier attitude toward site inspection
  - Unusually high allowable stresses
  - Inaccurate dead load calculation
  - Lack of research and testing for an unprecedented span

Ethical Aspects

- Cooper retained control, although his health and the inadequate fee paid did not allow adequate supervision
- Conflicts between cost and safety resolved in favor of cost
- Origin of Canadian Ritual of the Calling of an Engineer

Orderofeng2.gif - Microsoft Internet Explorer

File Edit View Favorites Tools Help

Back Search Favorites Media

Address http://www.order-of-the-engineer.org/ Go Links

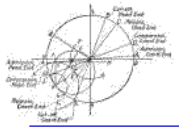

The Order of The Engineer

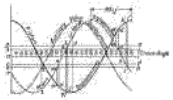

- The Obligation of an Engineer
  - The Engineers Ring
    - To Be an Engineer
    - Ceremony
    - Governors
  - List of Links
- Forms

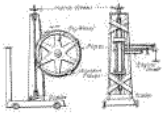

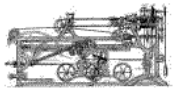

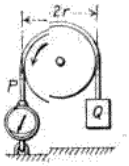

Code of Reg

Frequently Aske

BOG Minute

Click for The Obligation of the Engineer

OHIO

Cleveland State University
Link: 1
Date Chartered: 5/10/75
Last Update: 2/15/01
Status: Active

Epilogue

- Canadian government took over project, provided finances, hired team of experienced engineers
- Redesigned bridge collapsed a second time, in 1916, as center span was installed
- Still longest cantilever bridge in the world

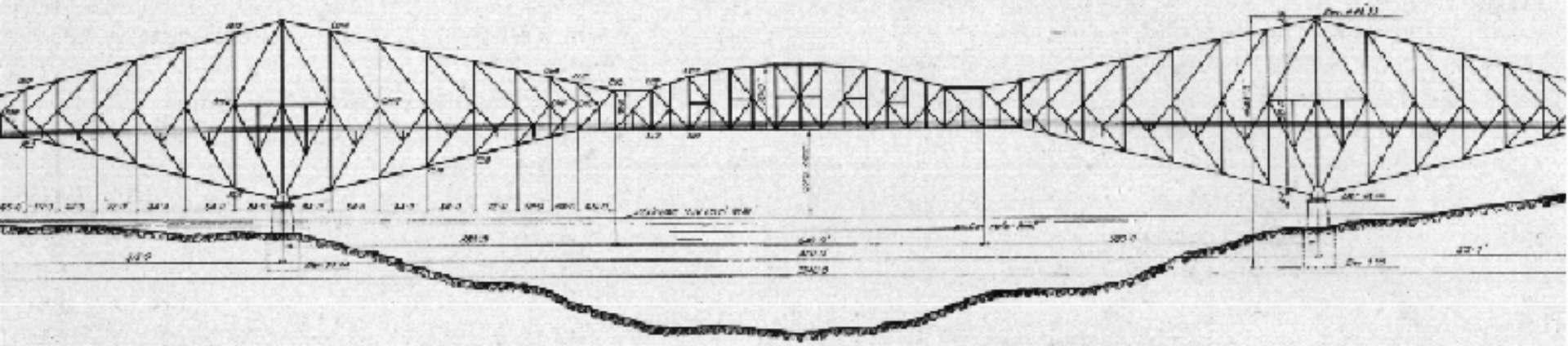

GENERAL ELEVATION JAMAICA HAY GATE TO KEYO

SCALE

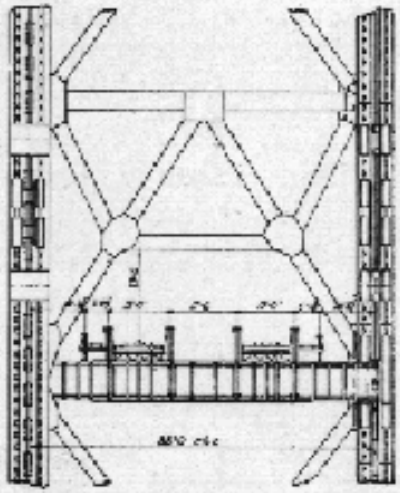

CROSS SECTION AT MAIN POST

SCALE

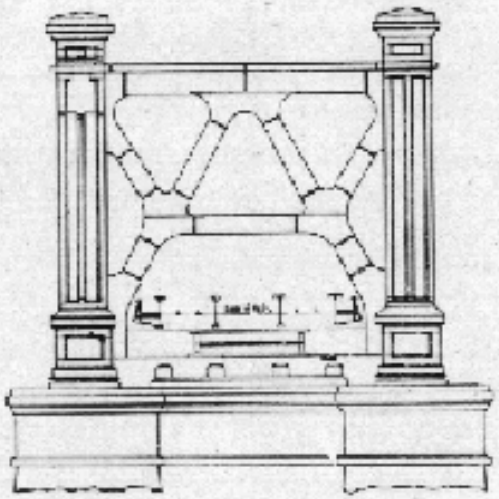

MAIN POSTS

SCALE

The Second Bridge Collapse

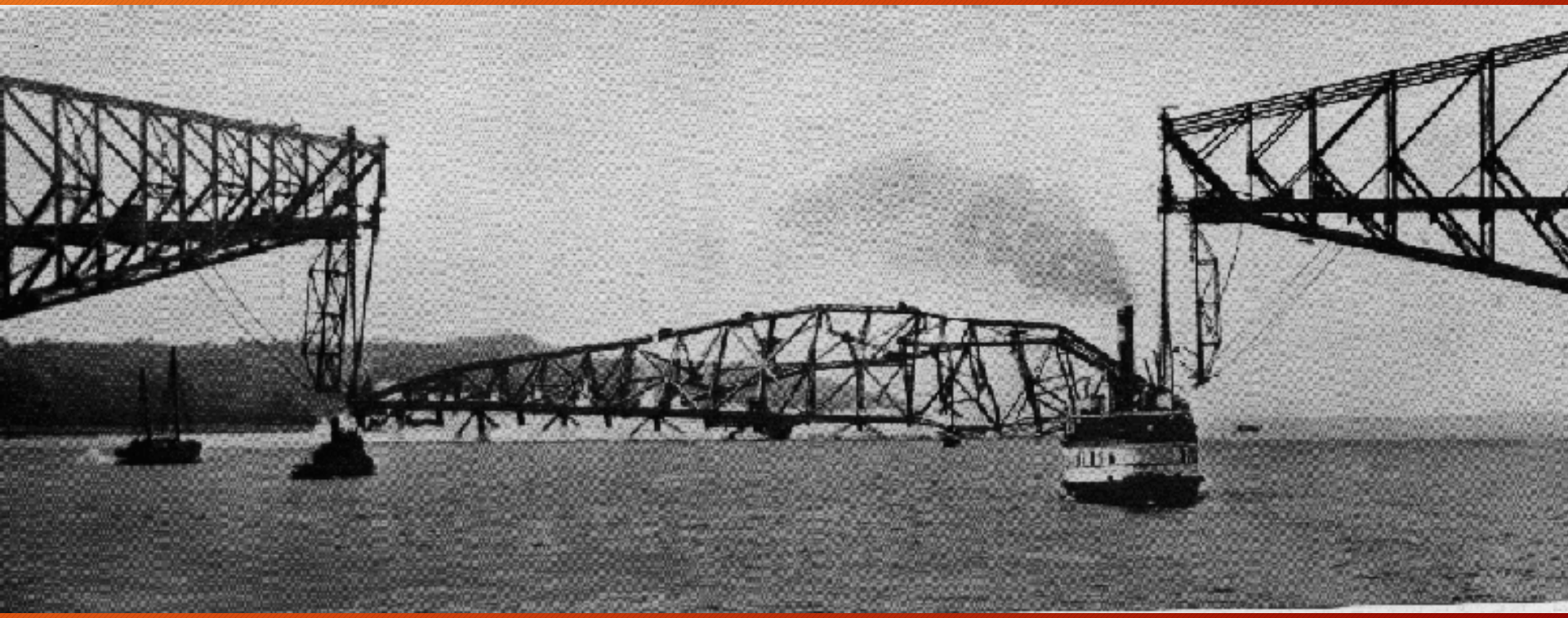

The Quebec Bridge Today

Hartford Civic Center Case Study

Case Study by
Rachel Martin
and Norb Delatte

Design and Construction

- 1970 – Innovative design proposed for 300 by 360 foot space frame roof, 83 feet above arena
- Two main layers in 30 by 30 foot grid, 21 feet apart
- 30 foot members braced by midpoint diagonals

Hartford Civic Center Roof

From LZA report

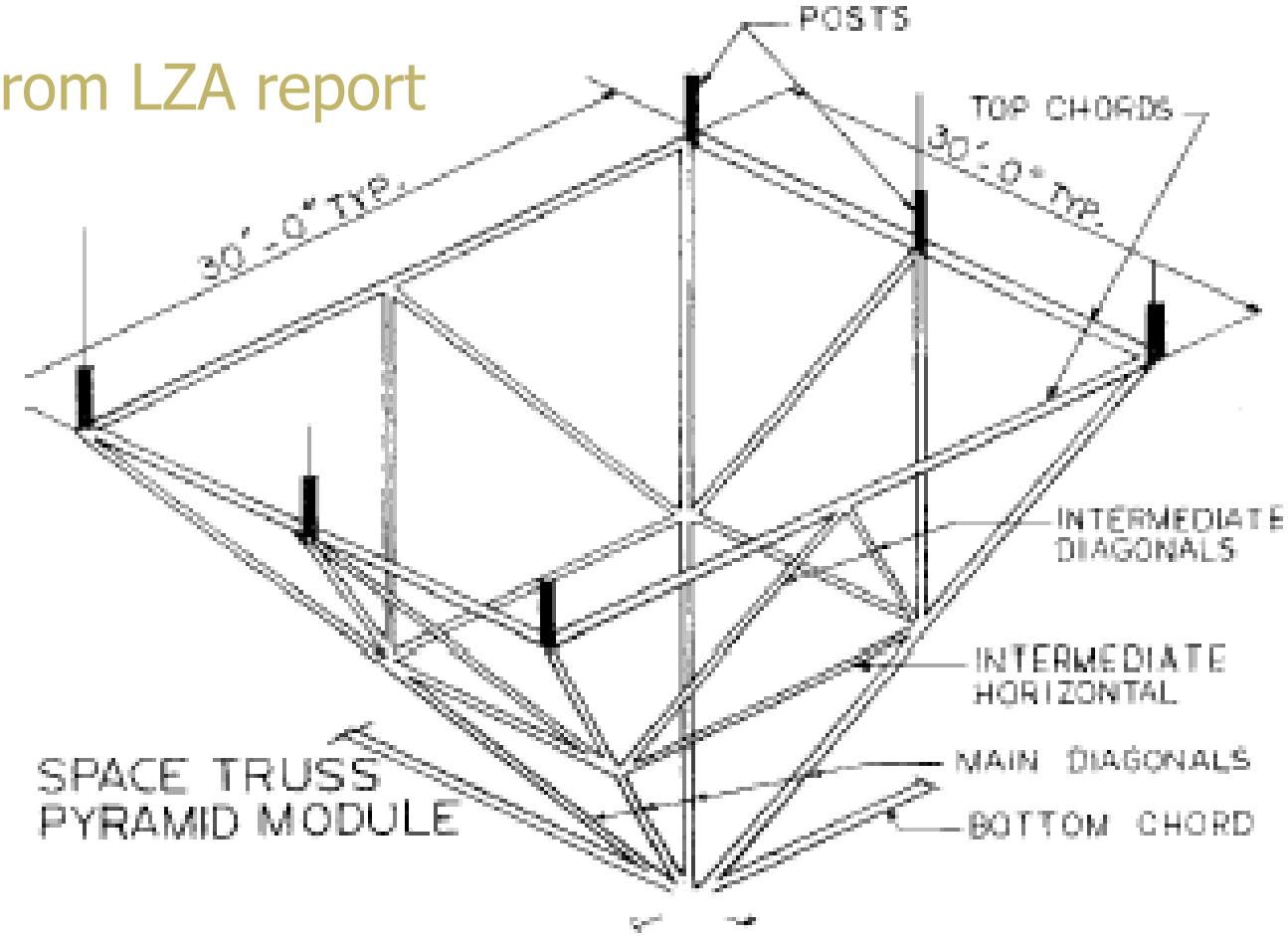

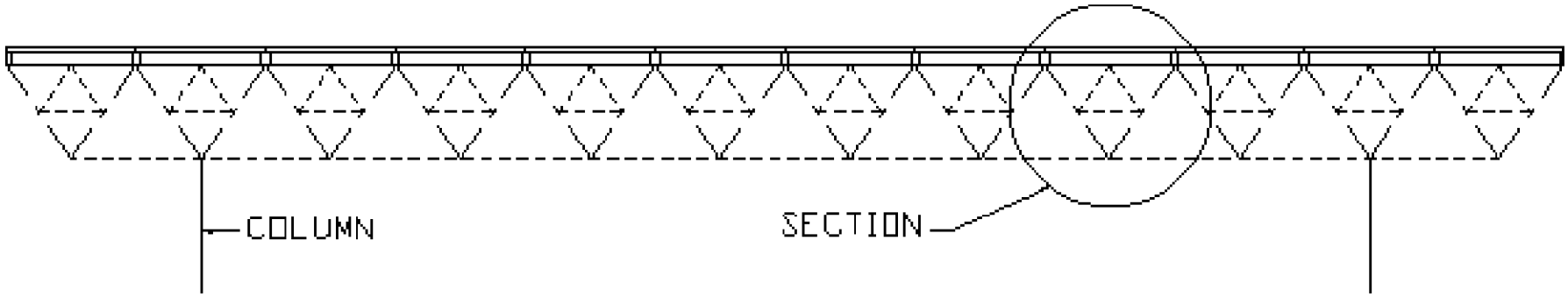


WARNING
UNAUTHORIZED PERSONNEL
KEEP OUT
ON SITE PARKING
PROHIBITED
VEHICLES TOWED AWAY
AT OWNERS EXPENSE


Bethlehem Steel
Bethlehem Steel

Unusual Elements

- Four angles arranged in cross, not I or tube shape – low buckling strength, but easy to connect
- Top horizontal members did not directly intersect diagonals
- Roofing panels on top of short posts
- Supported on pylon legs
- Space frame not cambered

Compression Member Configurations

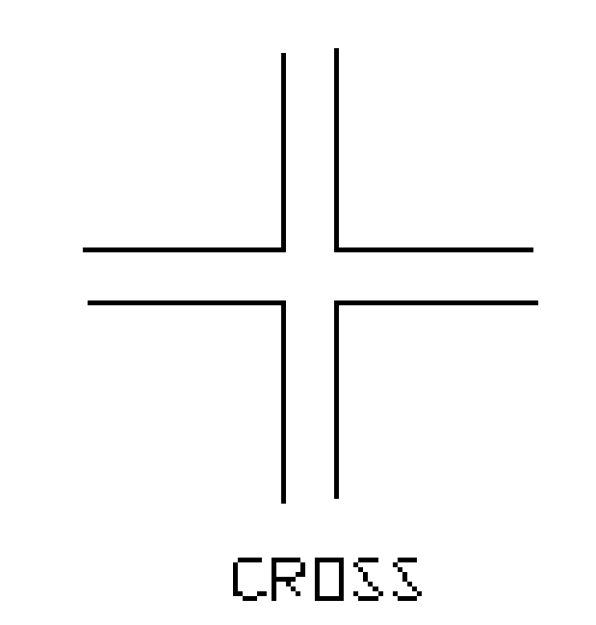

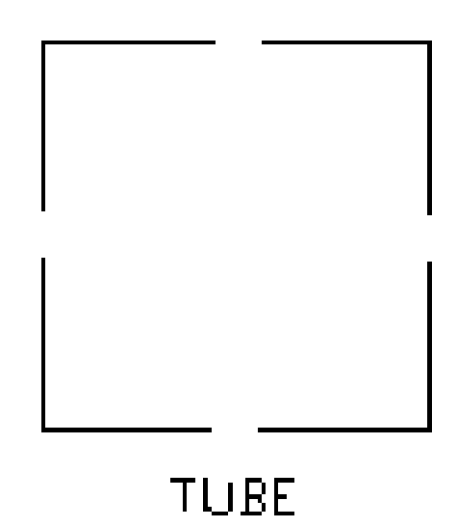

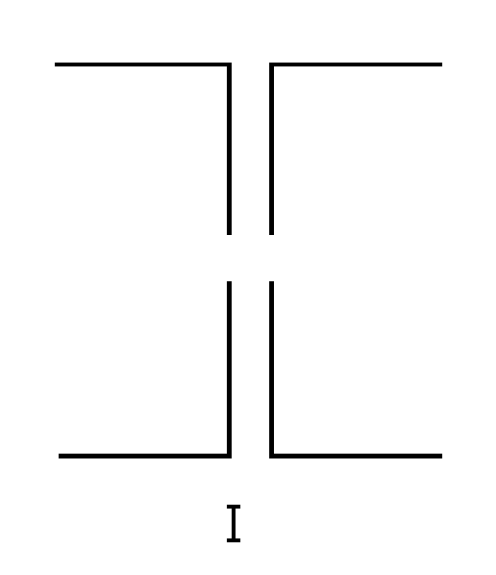

Use of Computers

- Too complex for hand analysis
- Early use of “state-of-the-art” computer analysis
- Deflection predictions – 12 inches down at center, 6 inches up at corners

Construction

- Roof assembled on the ground
- Excessive deflections found at some nodes – engineers notified
- Roof jacked up onto pylons – deflections twice as much as predicted
- Subcontractor had difficulties attaching fascia panels
- Pattern – large, unanticipated deflections

Collapse

- Roof collapsed under snow load at 4:19 a.m. on January 18, 1978
- Evening before, arena had been packed for a basketball game
- No loss of life, no injuries

From Feld and Carper, *Construction Failure,* 1997

Cause of Failure – LZA

- Roof began failing as soon as completed, due to design errors
- Dead loads underestimated by 20 %
- Three design errors – top layer compression members
  - Some overloaded by 852 %
  - Other members overloaded by 213 %
  - Interior members overloaded by 72 %

Bracing, Buckled Shapes, and Capacities

From LZA report

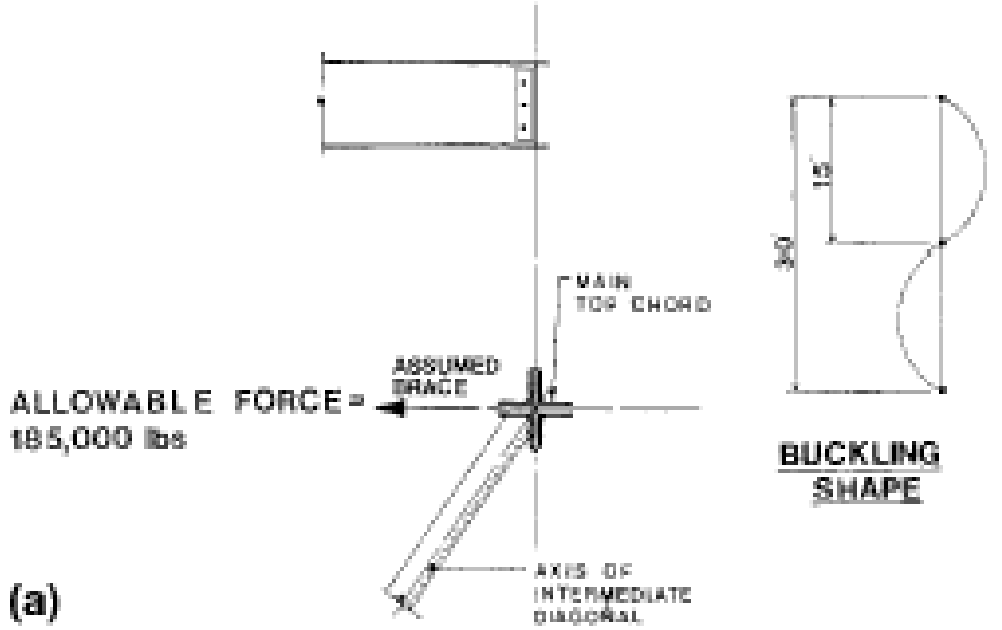

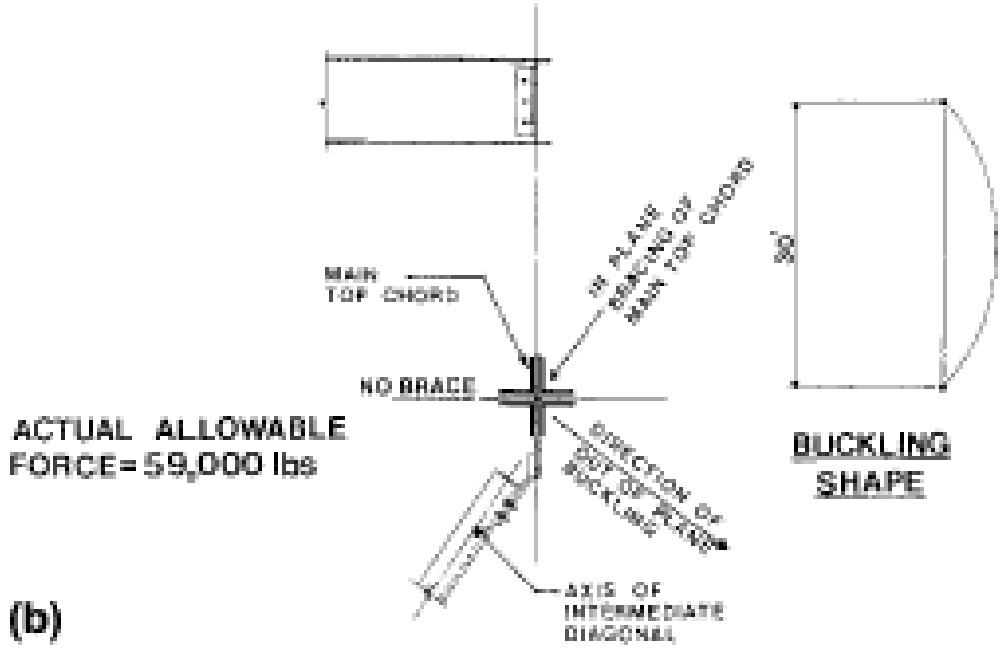

TOP CHORD EAST-WEST DIRECTION

Connection A

Original	As-built
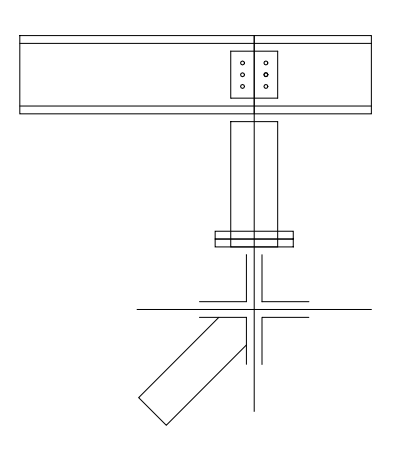	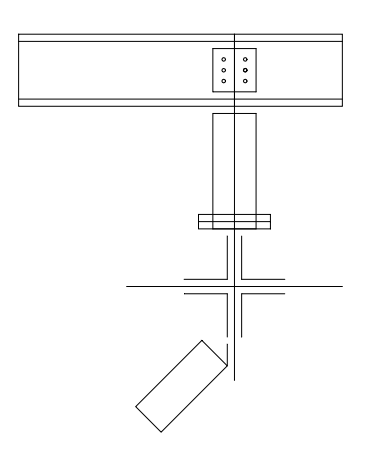
Capacity 160,000 lb.	Capacity 15,440 lb.

Connection B

Original	As-built
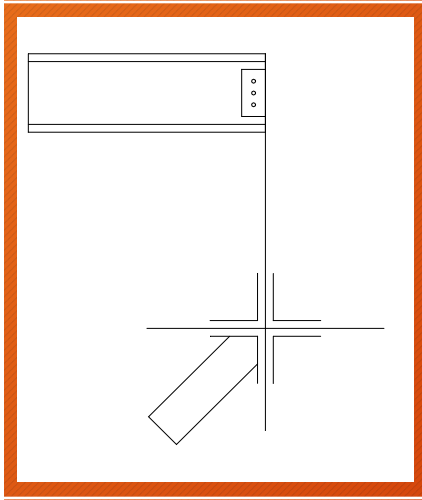	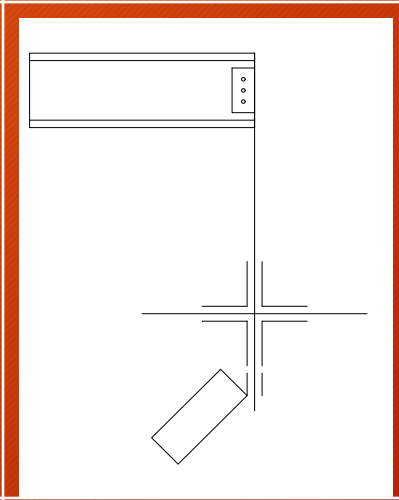
Capacity 185,000 lb.	Capacity 59,000 lb.

Connection C

Original	As-built
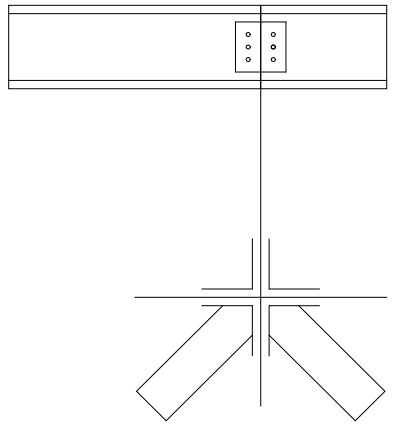	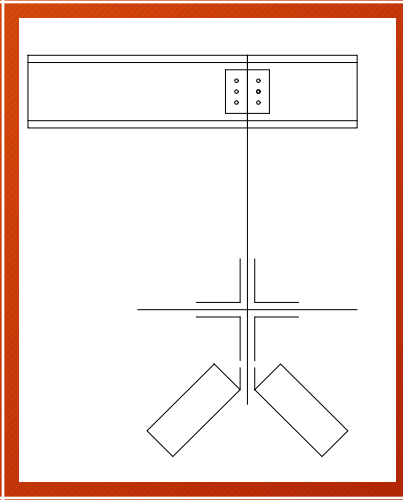
Capacity 625,000 lb.	Capacity 363,000 lb.

Other Findings

- Roof posts also applied bending stress, not considered in design
- Spacer plates for built up members too far apart – violated AISC slenderness ratio
- Some members had bolt holes > 85 % of cross section, violated AISC
- Some misplaced diagonal members

Other Investigations

- Loomis and Loomis, Inc. – blamed torsional buckling, not lateral buckling
- Hannskarl Bandel, for architect's insurance company – blamed faulty weld connecting scoreboard to roof

Legal Repercussions

- Parties reached out-of-court settlement six years after collapse
- No definitive ruling on the cause of collapse

Professional and Procedural Aspects

- Five subcontracts coordinated by construction manager
- Construction manager refused to hire a structural engineer to inspect project
- After collapse, construction manager disclaimed all responsibility
- LZA report – inspection and/or QC inadequate, poorly handled

Professional and Procedural Aspects

- Visible distortion and bowing of structure should have been a red flag
- Connecticut requires peer review of certain buildings, but did not for this building

Ethical Aspects

- Excessive deflections brought to engineer's attention
- Engineer provided assurances, without rechecking work
- Workers knew building was a death trap (Philadelphia Inquirer, May 28, 1978)

Conclusions

- Need to check whether computer results make sense – hand calculations, knowledge of structural behavior
- Need field inspection
- Unexpected deflections must be explained
- Avoid confusion in project responsibility

- Computers have enabled people to make more mistakes faster than almost any invention in history, with the possible exception of tequila and hand guns – Mitch Ratcliffe

Parallels – Quebec and Hartford

- Daring structures, pushing the limit
- New, improved, optimized structural analysis
- Lack of on-site engineering
- Did not react appropriately to structural deformations
- Parts did not fit together
- Buckling and connections

Case study by
Cynthia Pearson and
Norb Delatte

Ronan Point Apartment Tower-1968

Design and Construction

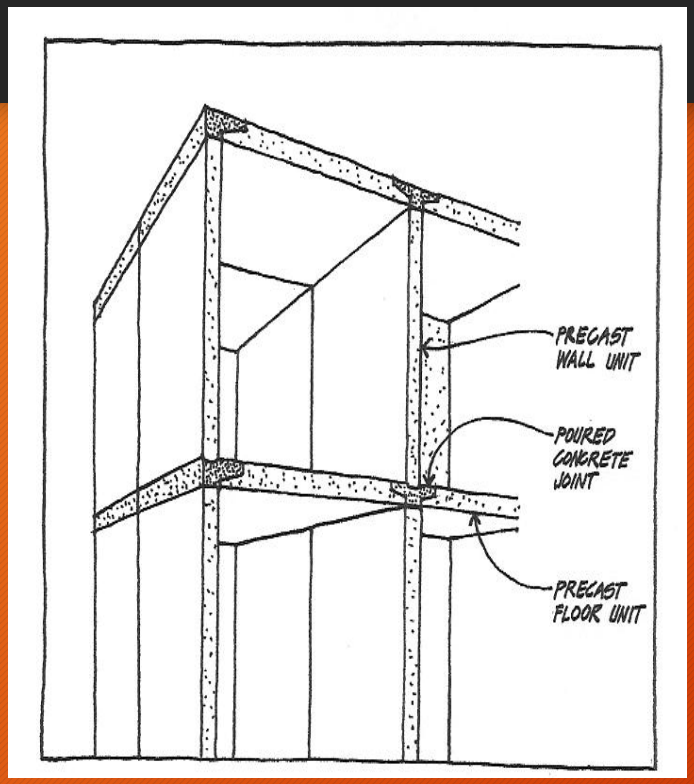

Precast Large Panel Construction (Levy and Salvadori, Why Buildings Fall Down, 1992, p. 103)

- Larsen-Nielson System – Denmark, 1948
- Precast Large Panel Concrete
- 22 floors high – 5 flats per floor – total 110
- Took less than 2 years to complete (July 25, 1966-March 11, 1968)

System Building

- Need for new housing stock after WW II
- Shortage of skilled construction workers
- New method needed for
  - Speed of construction
  - Minimum building footprint (high-rise)
  - Simplified construction methods

Collapse

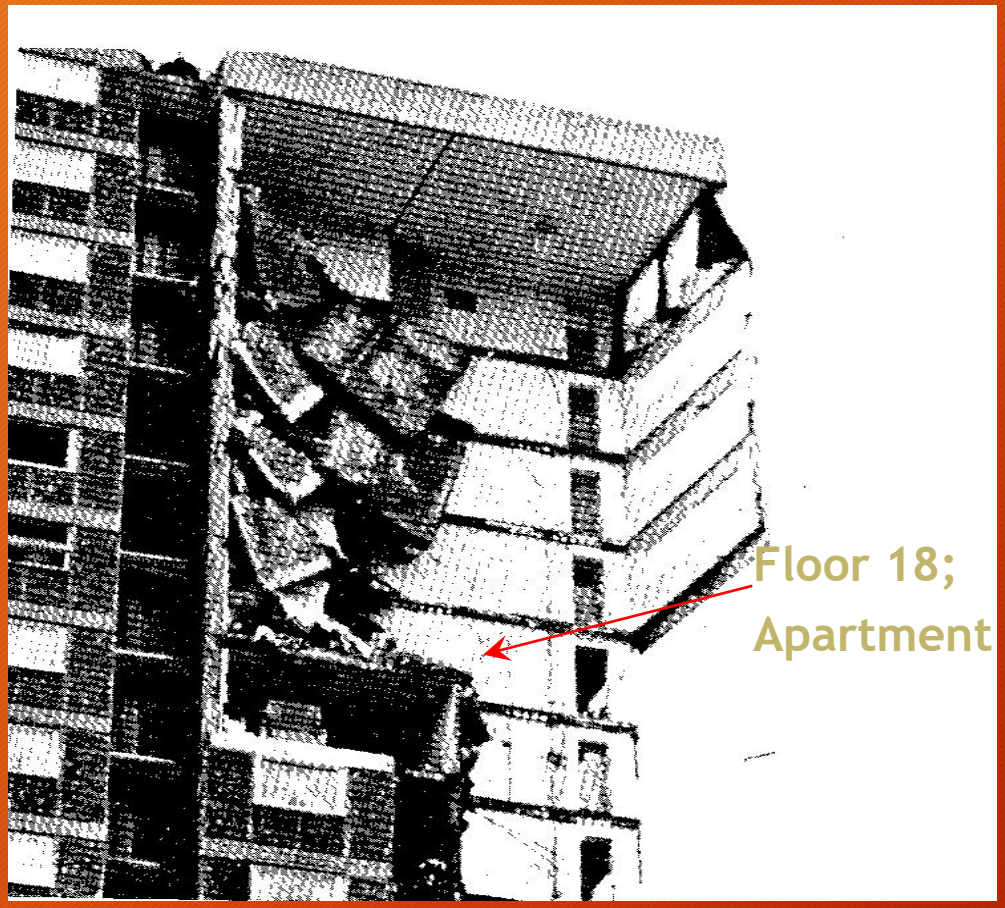

- Southeast corner collapsed 5:45 a.m.
- Initiated by gas explosion on 18th floor
- All exterior walls load bearing

Collapse

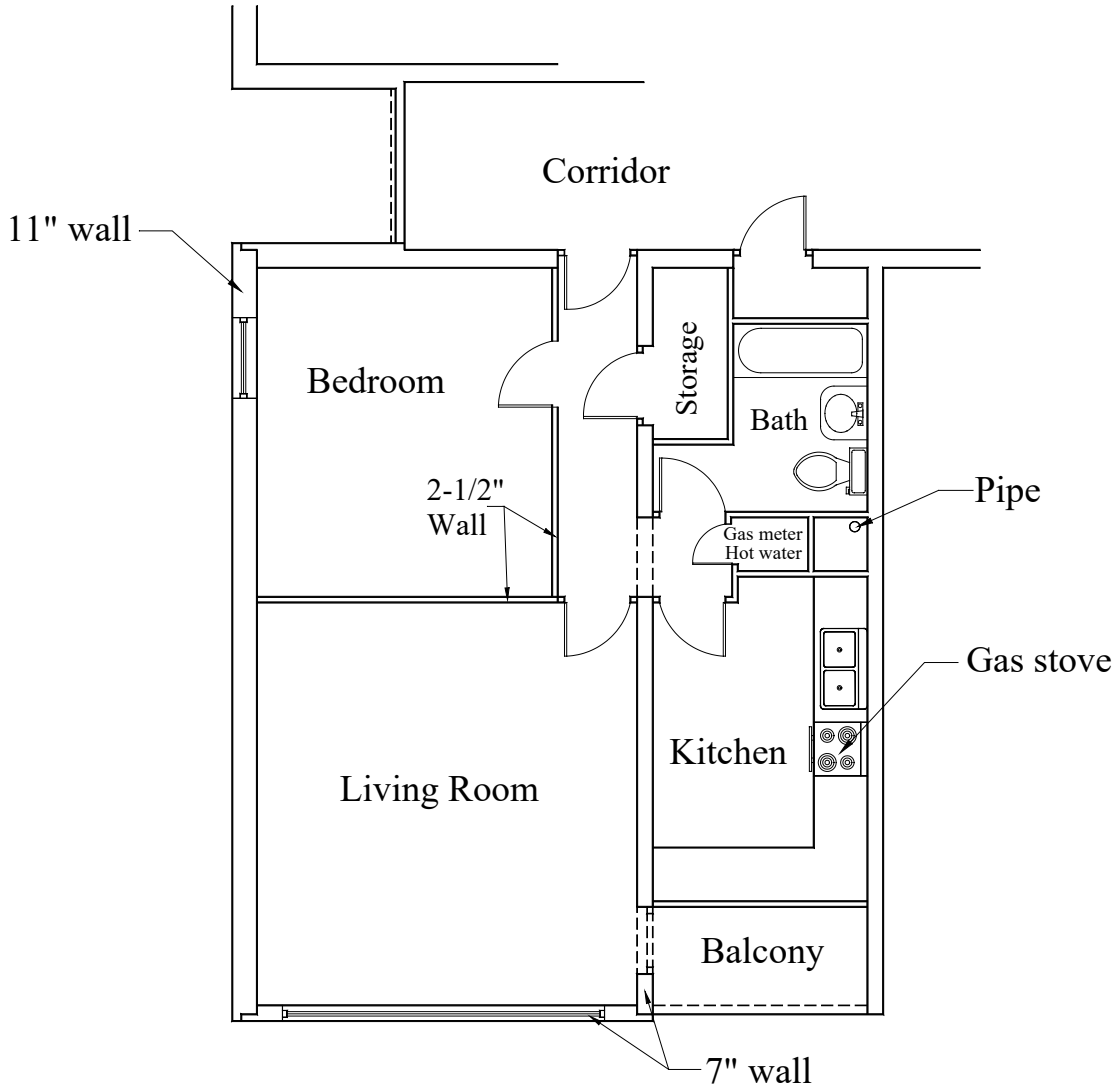

Layout of Apartment 90

- Collapsed in 2 phases
- Collapse sheared off living room section of the apartments
- 4 fatalities/17 injuries

Causes of Failure

- Substandard brass nut fractured
- Relatively small explosion – less than 10 psi
- Tests show that walls could be laterally displaced at 2.8
- Lack of structural redundancy

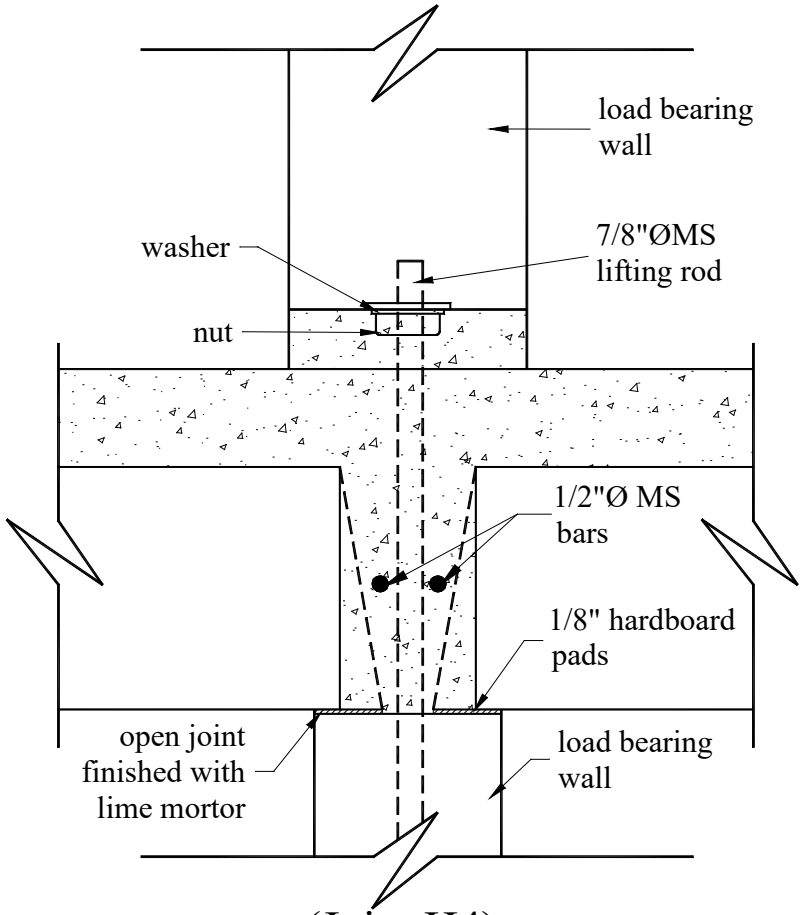

(Joint H4)
Joint between interior wall and floor slabs

Remedial Actions Taken

- Southeast corner was rebuilt
- Building reinforced with blast angles
- Gas banned from Ronan Point

Joint Details

Schematic Design of Joint

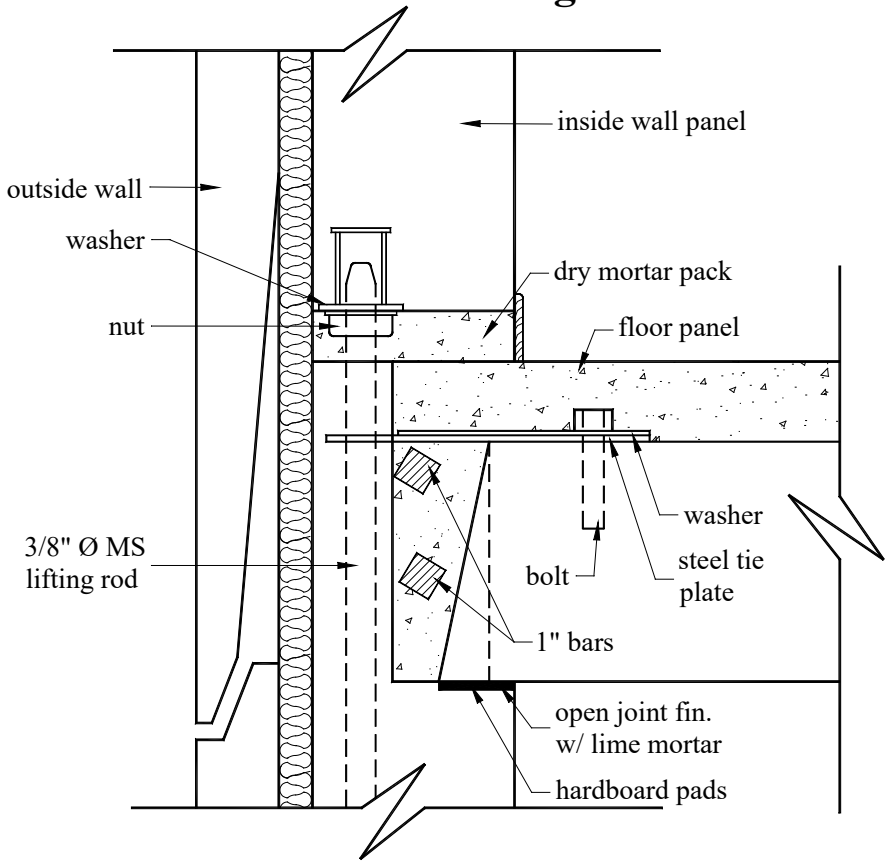

(H2 Joint)
Horizontal joint between
floor slab and flank wall

As Built Joint

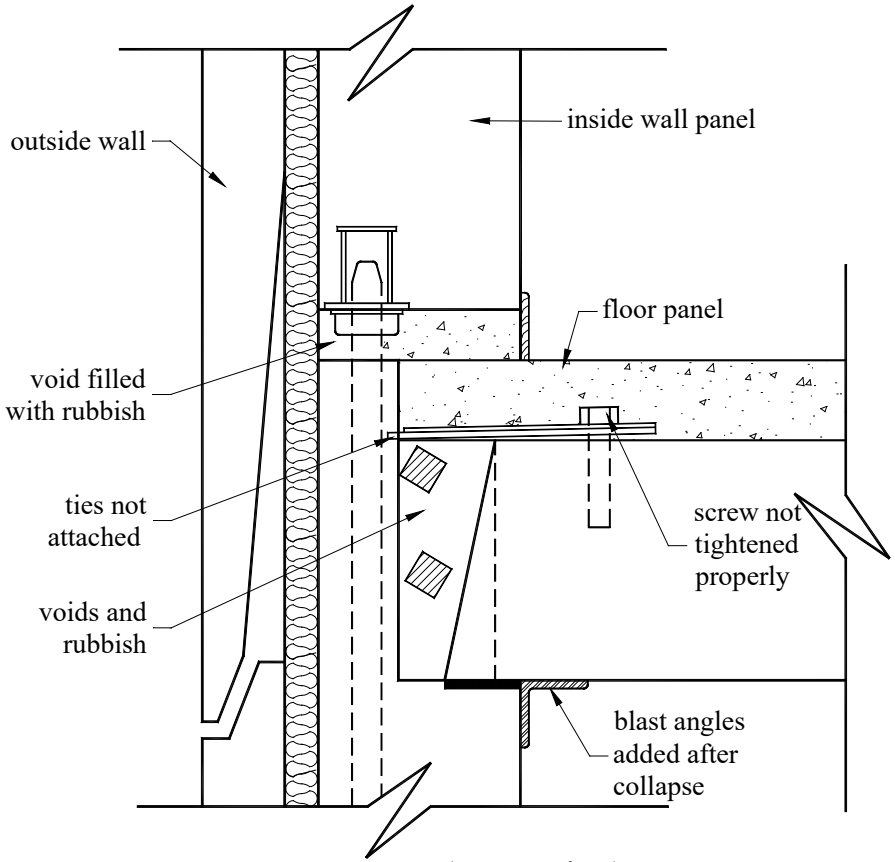

(H2 Joint)
Horizontal joint between
floor slab and flank wall

Technical Concerns

- Fire and/or strong wind could have similar effect on building
- Designed to withstand 63 mph wind
- 105 mph wind at 200 ft. up was expected to occur within life of building
- System was not intended for more than 6 floors
- Poor workmanship

Building Demolition

- May 1986
- Architect Sam Webb insisted on dismantling floor by floor
- Allowed study of joints

Building Demolition

Webb: “I knew we were going to find bad workmanship – what surprised me was the sheer scale of it. Not a single joint was correct. Fixing straps were unattached: leveling nuts were not wound down, causing a significant loading to be transmitted via the bolts: panels were placed on bolts instead of mortar. But the biggest shock of all was the crucial H-2 load-bearing joints between floor and wall panels. Some of the joints had less than fifty percent of the mortar specified.” (Wearne, 2000).

Building Code Changes

- Fifth amendment – 1970
- Structure must remain stable (with reduced safety factor) with member removed
- Must resist specified pressure from any direction
- Termed “robustness” provision in UK

Conclusions

- Flawed in design and execution
- Existing building codes inadequate for this structure
- Lacked alternate load paths to redistribute forces
- Poor workmanship at critical connections

2000 Commonwealth Avenue

Suzanne King,
Roger Williams University
Faculty Advisor: Dr. Norbert Delatte

January 25, 1971

The Building

- Sixteen story high-rise apartment building
- Cast-in-place reinforced concrete
- Flat slab construction
- Central elevator shaft
- Penthouse mechanical room with a 5 ft. crawl space

Construction

- Excavation began in fall of 1969
- Most of work subcontracted
- At time of collapse, construction almost complete
- Brickwork up to 16th floor and work started in individual apartments

Floor Plan

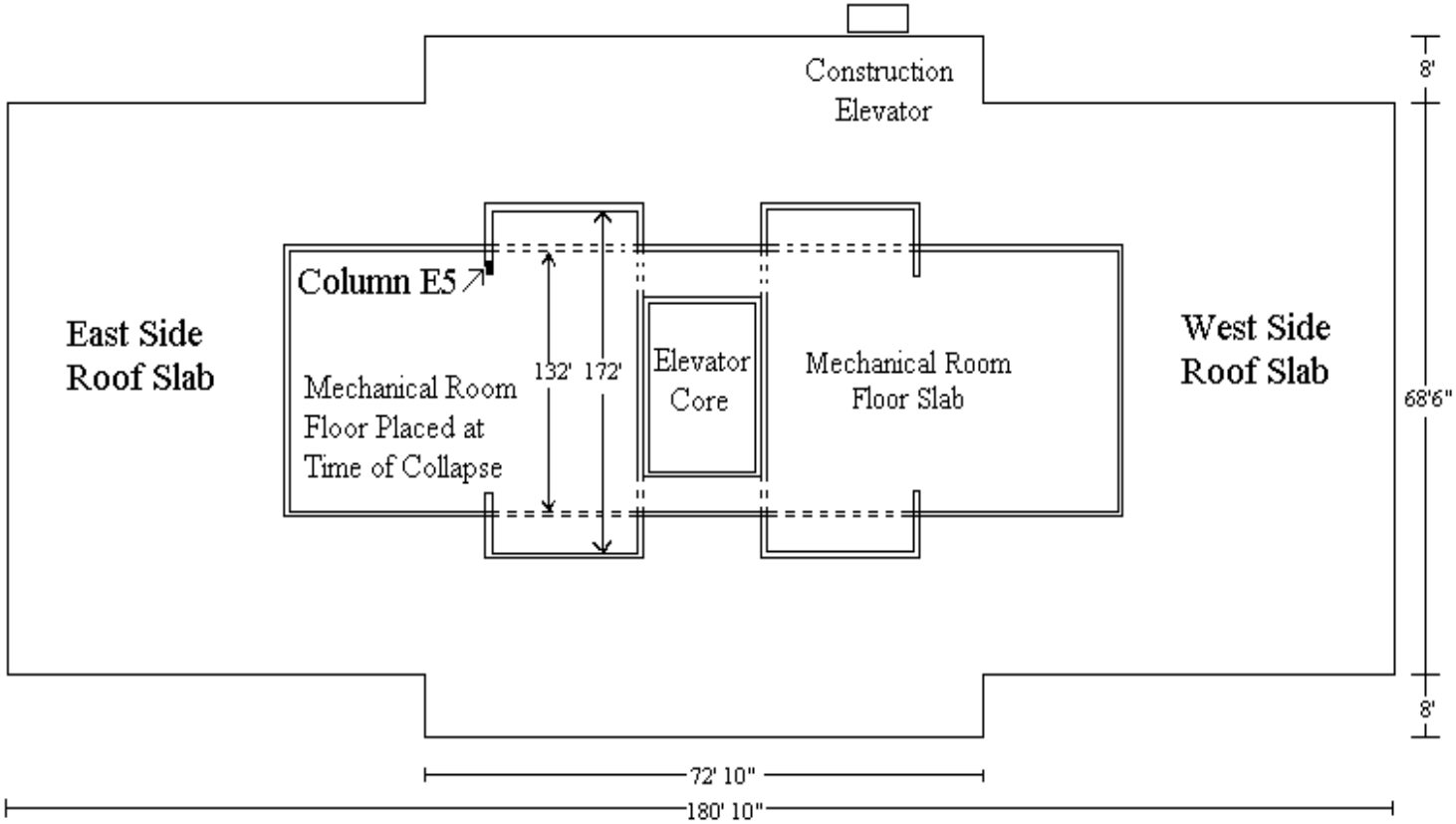
Construction
Elevator
8'
Column E5
East Side
Roof Slab
Mechanical Room
Floor Placed at
Time of Collapse
132'
172'
Elevator
Core
Mechanical Room
Floor Slab
West Side
Roof Slab
68'6"
8'
72' 10"
180' 10"

Collapse

- Phase 1: Punching Shear Failure in the Main Roof at Column E5
- Phase 2: Collapse of Roof Slab
- Phase 3: General Collapse

Phase 1: Punching Shear

- About 3:00 pm workers take break from placing concrete for the mechanical room floor slab
- Placement started at the west edge and proceeded east
- Shortly after break there was a drop in the floor slab
- Punching shear was noticed around column E5

Phase 2: Collapse of Roof Slab

- After hearing a warning, most workers managed to get out of the way
- Roof slab began to form the shape of a belly
- Roof collapsed onto sixteenth floor
- Reinforcing steel was being placed, so workers were forced to cross over to the west side of the building

Phase 3: General Collapse

- Progressive collapse occurred 20 minutes after roof collapsed
- Weight of the roof caused the 16th floor to collapse onto 15th and so on down to the ground
- Two thirds of the building was gone
- Four workers died

Extent of Collapse

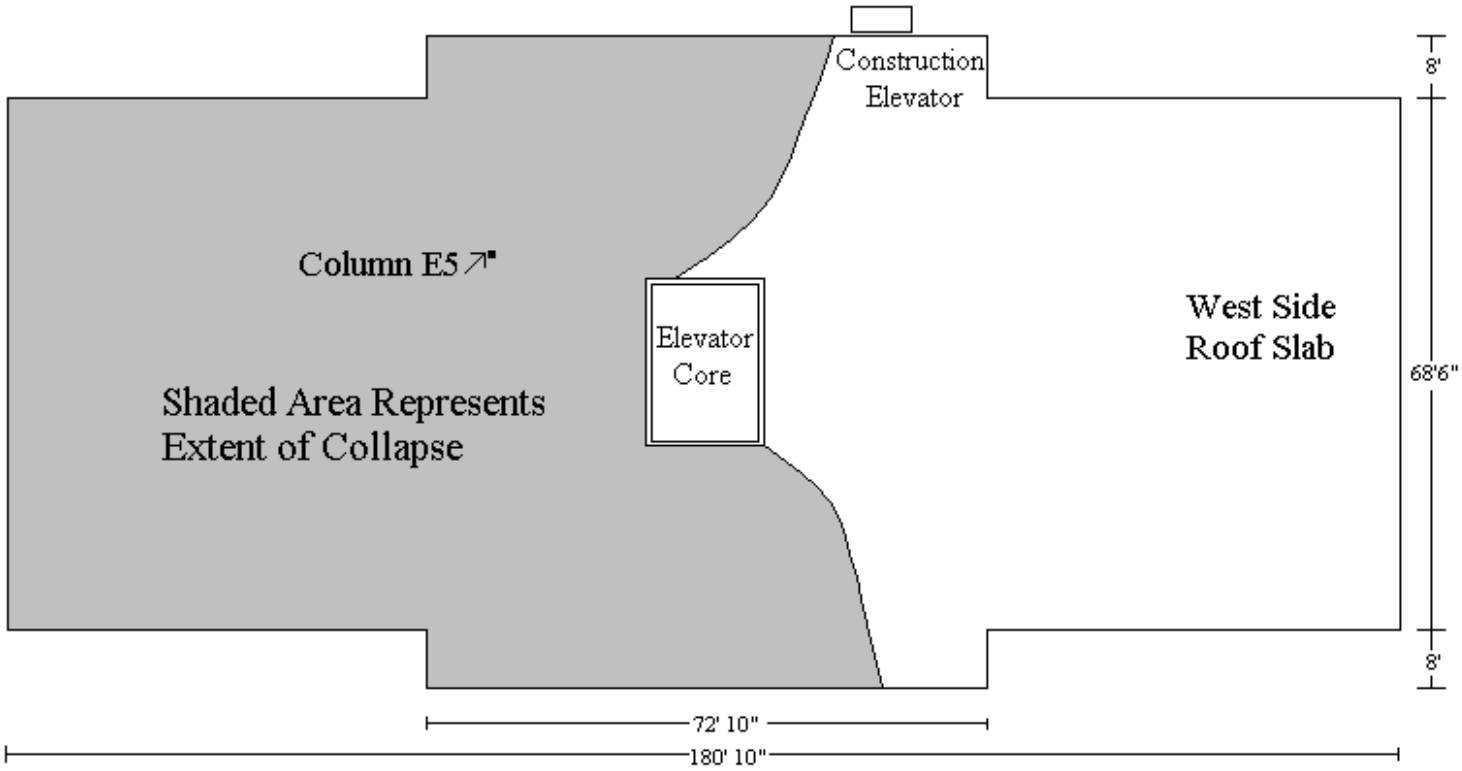

Boston Globe Photos

Punching Shear

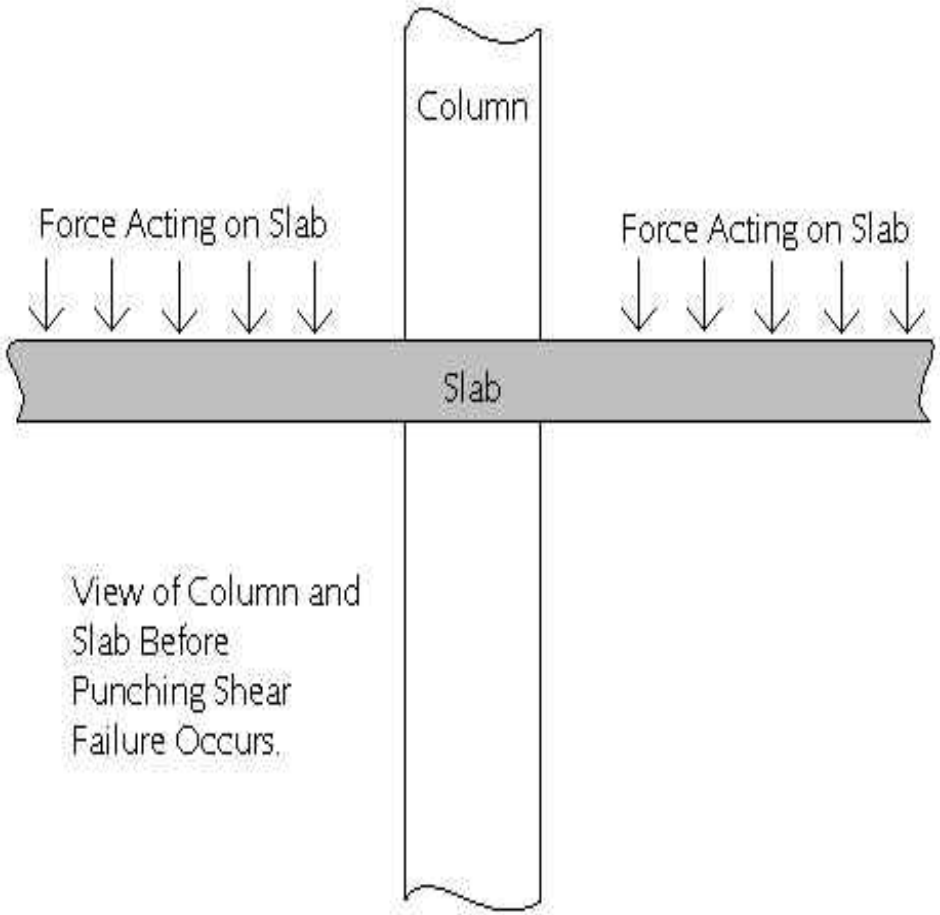

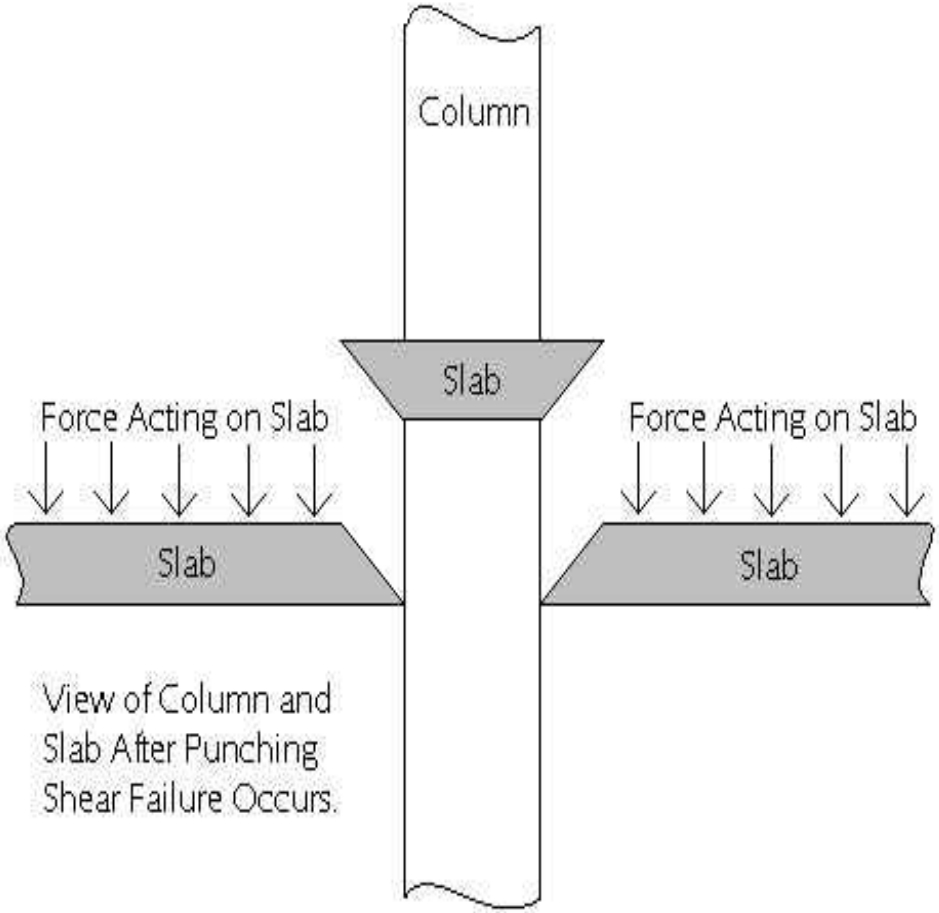

Causes of Punching Shear

- Concrete strength was well below required 3,000 psi
- Inadequate shoring under the roof slab
- Construction equipment and two boilers were on the roof

Design/Construction Flaws

- Insufficient length of rebar
  - bars did not extend far enough into columns
- Incorrect placement of bars
  - confusion with deliveries
  - design around columns did not meet ACI codes

Procedural/Construction Flaws

- Lack of proper building permit and field inspection
- Premature removal of formwork
- Lack of construction control

Harbour Cay Condominium

- Building collapsed while under construction in Cocoa Beach, FL, March 27, 1981
- Yet another punching shear failure
- Designed by a retired NASA engineer, hired another retired NASA engineer to do calculations

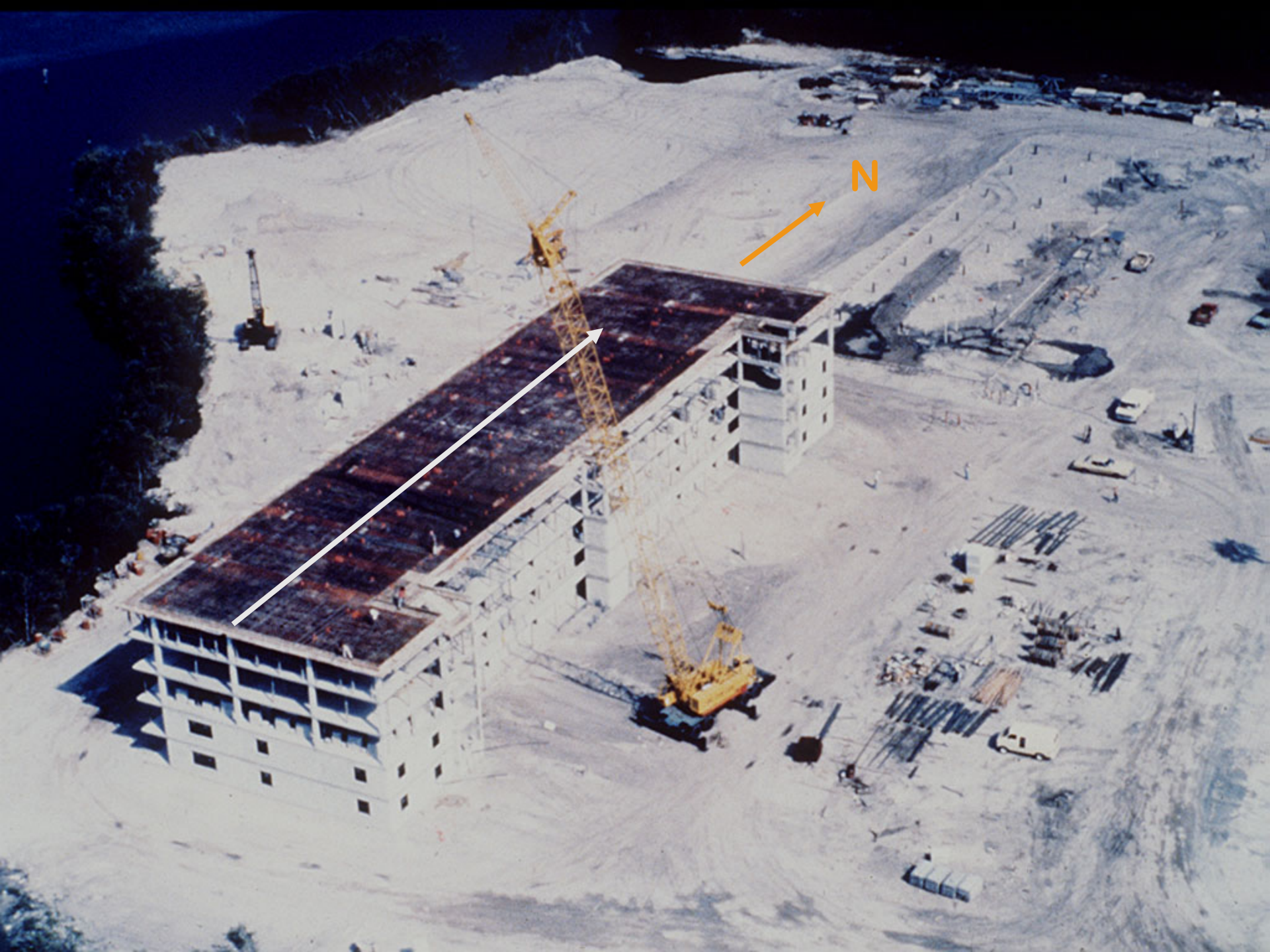
N


Elevator Tower
N

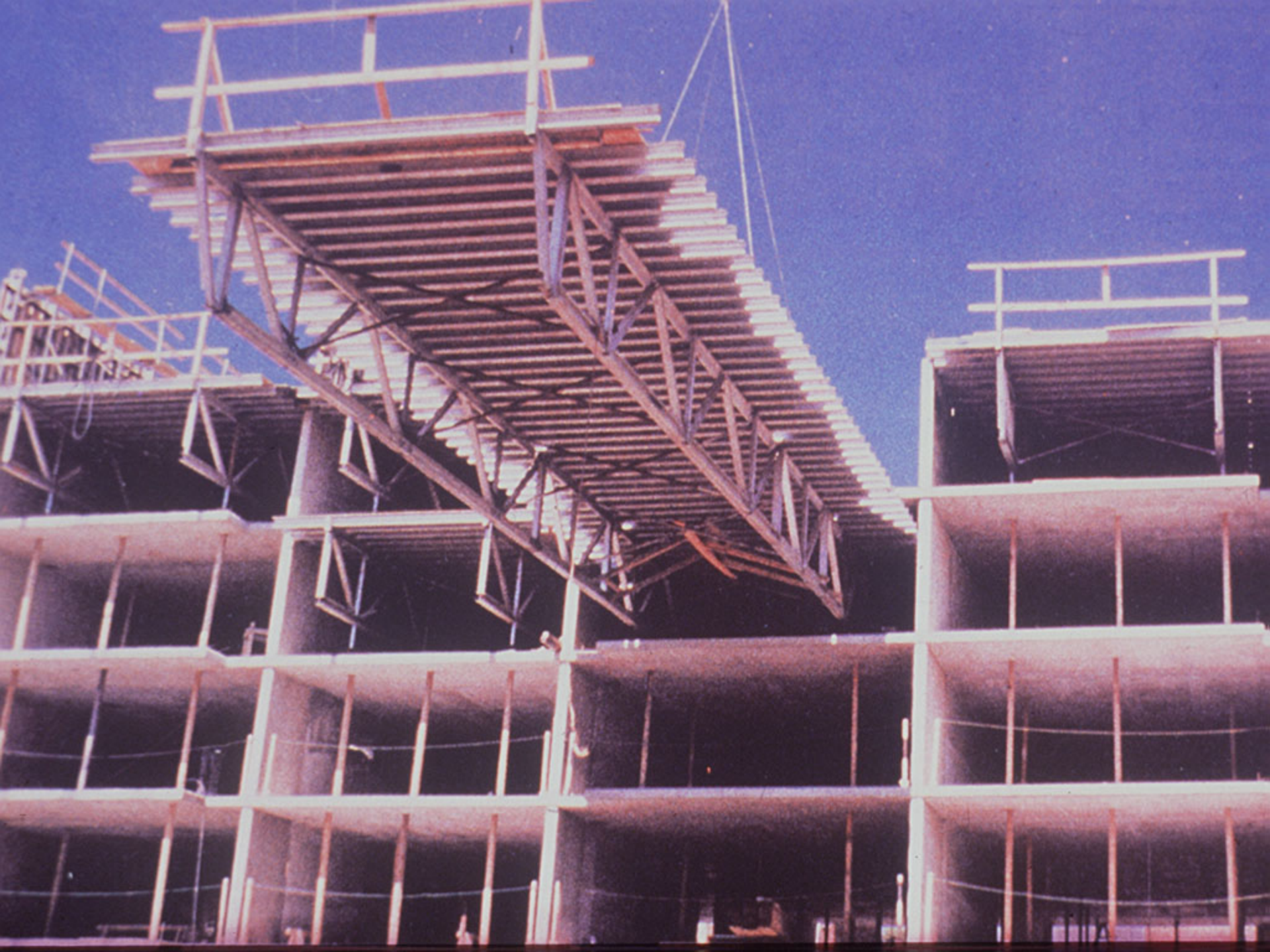

ASSUMED STATE OF CONSTRUCTION AT THE TIME OF THE COLLAPSE

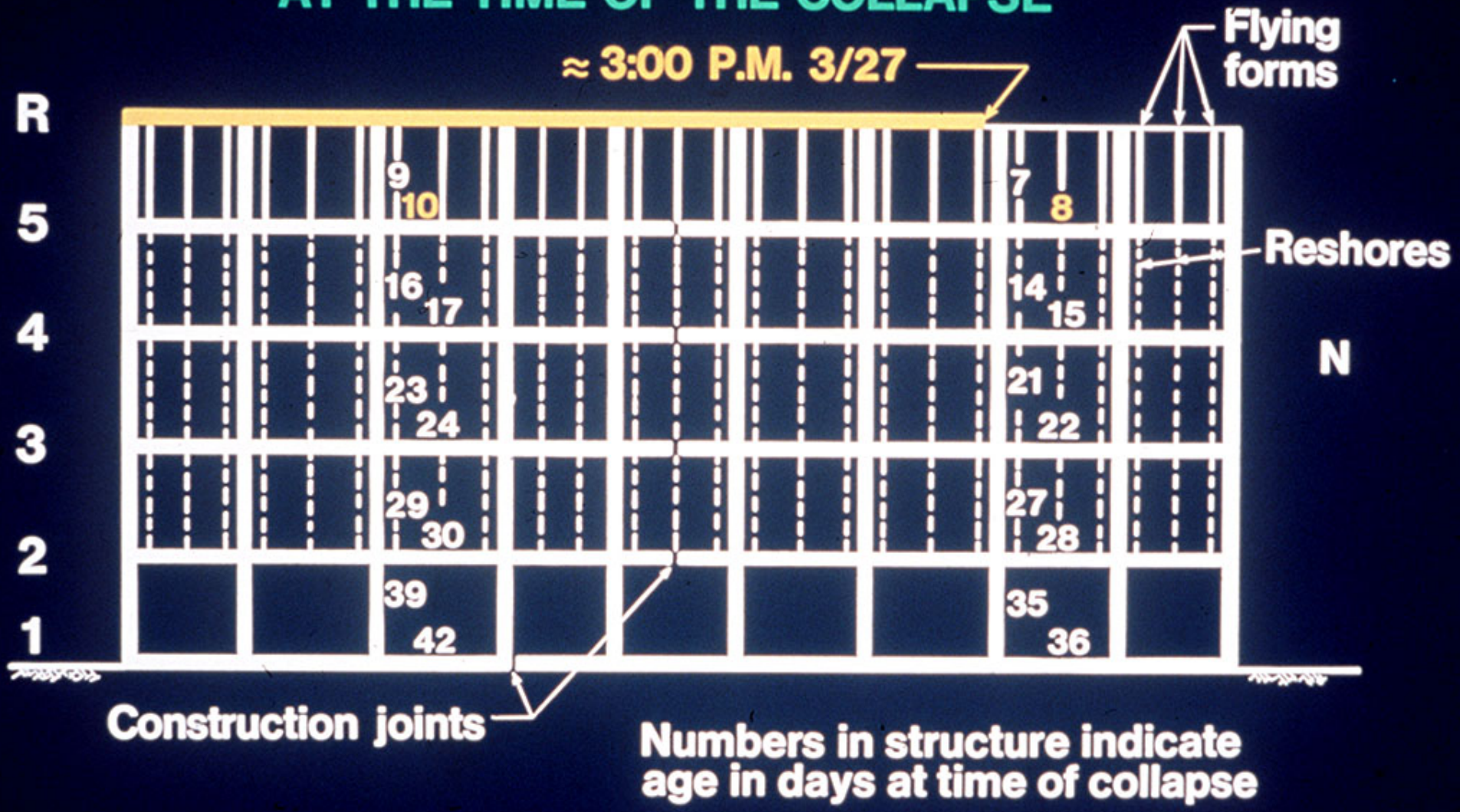

Potential Causes (NIST)

- Low concrete strength
- Weak coarse aggregate - low tensile strength concrete
- Inadequate reshoring
- Impact loading during concrete placement

Critical Omissions

- No checks for deflection or minimum slab thickness
- No punching shear or beam shear checks
- No checks for column reinforcement spacing
- No calculation of effective depth of slab flexural reinforcement

Structural vs. Shop Drawings

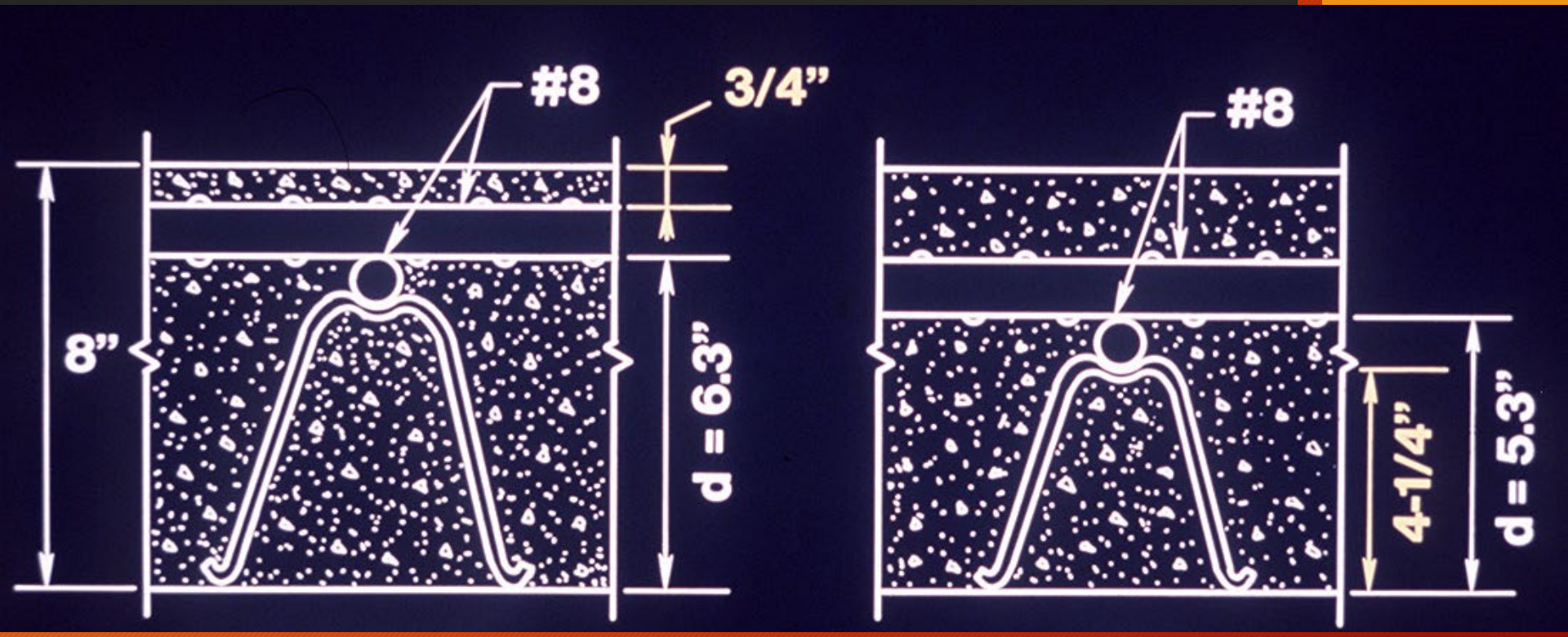

Structural

Shop

CRITICAL SECTION FOR COMPUTING PUNCHING SHEAR CAPACITY OF SLAB

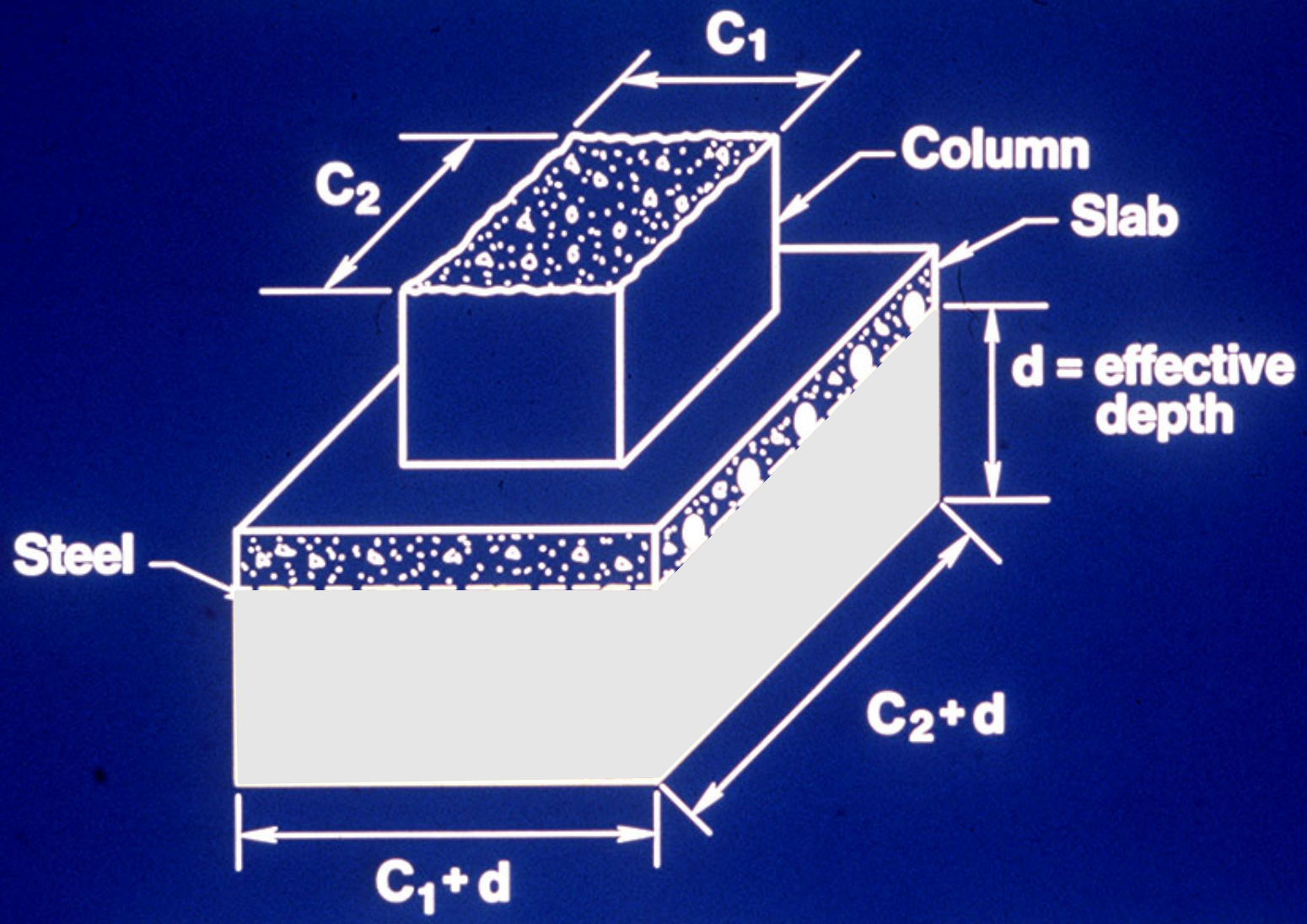

AREA OF CRITICAL SECTION = $2d(C_1+C_2+2d)$

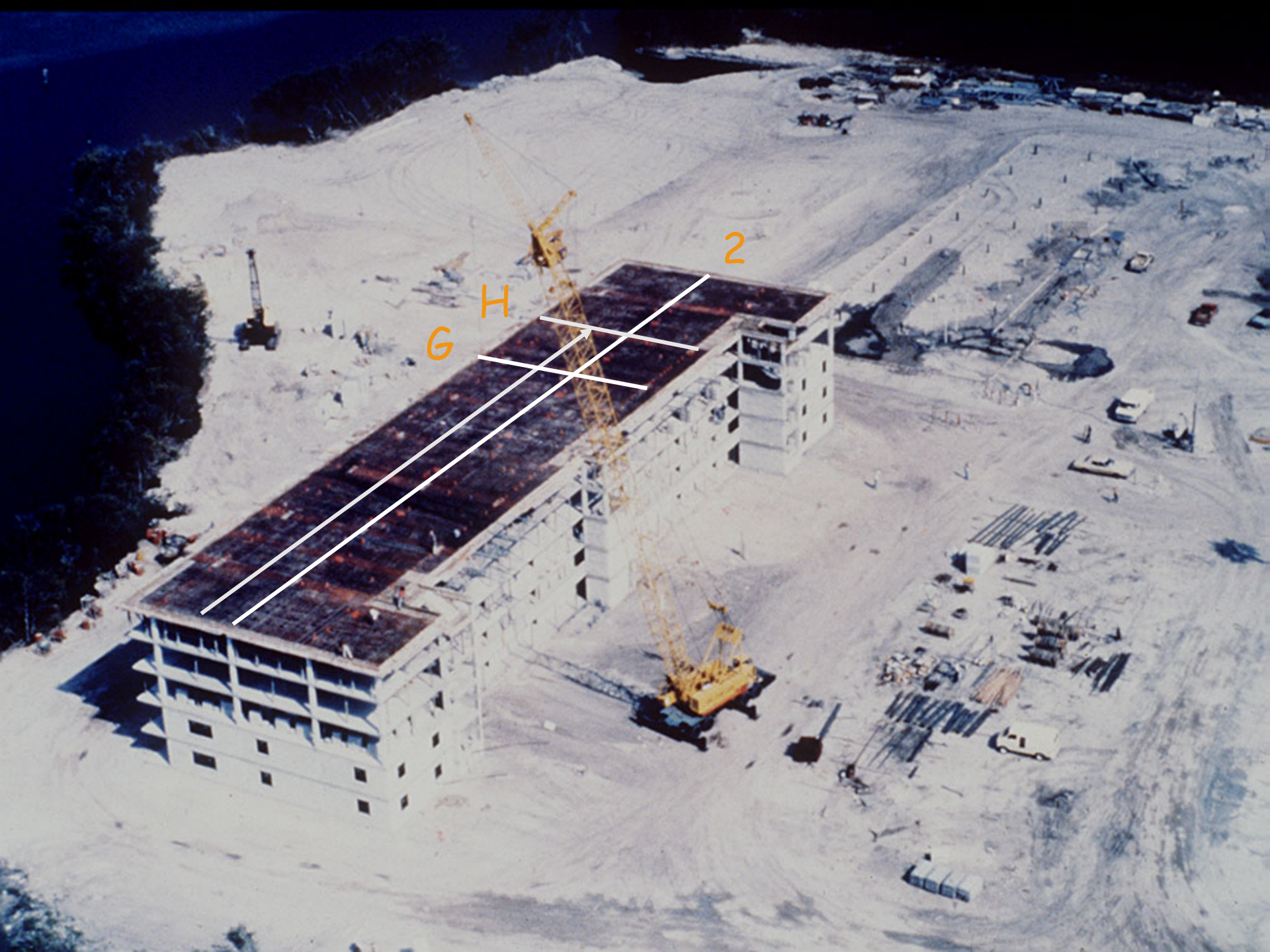
2
H
G

MAXIMUM PUNCHING SHEAR STRESSES IN FIFTH FLOOR ALONG COLUMN LINE 2

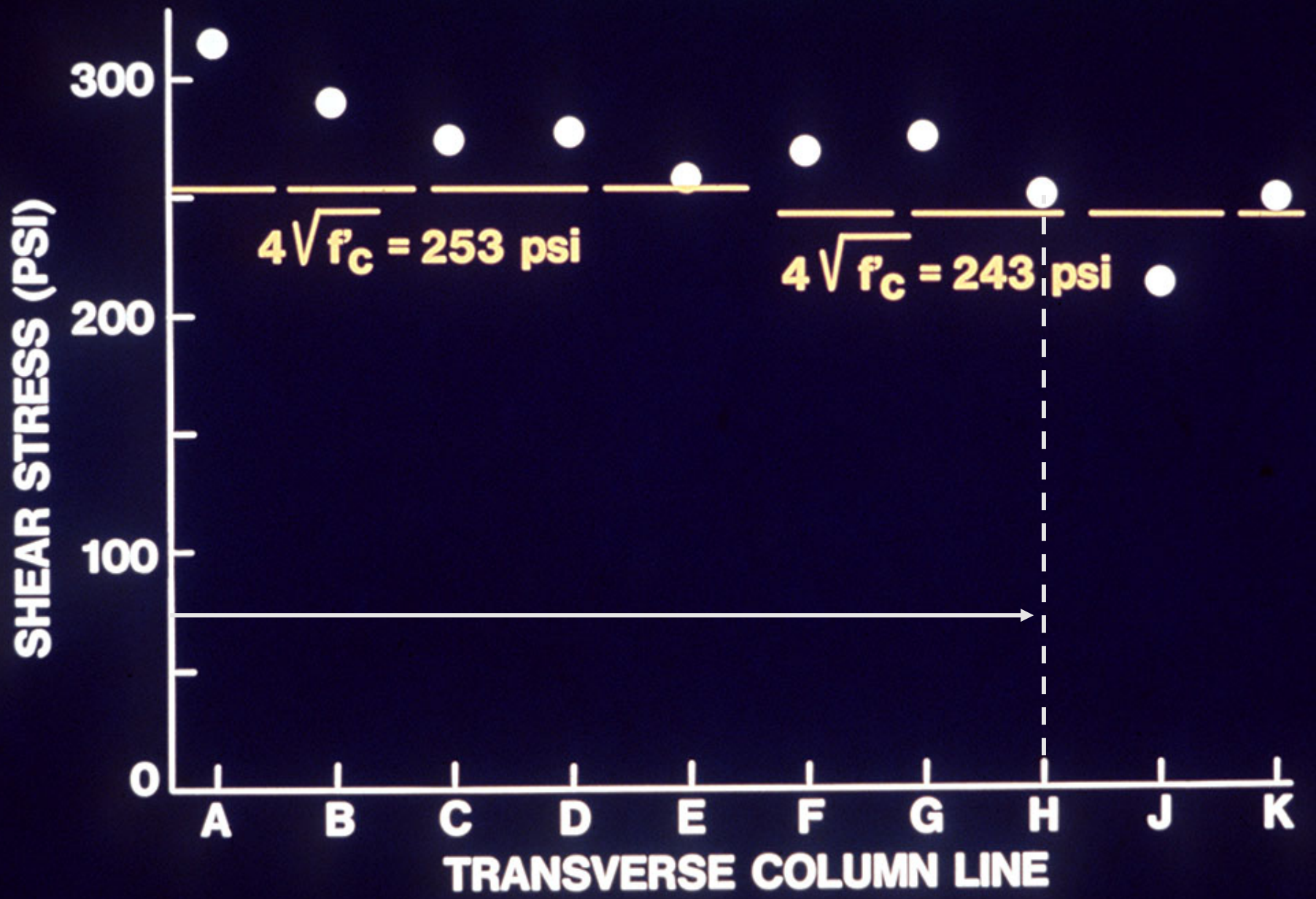

Most Probable Cause of Failure (NIST)

Insufficient punching shear capacity

- Omission of punching shear check during design of floor slabs
- Incorrect placement of top steel in column strips

Structural engineering is not rocket science.

It is evidently much more difficult.

Discussion and Conclusions

- Important to investigate failures thoroughly to improve engineering practice
- In the U.S. systems are uneven – much better for bridges and tunnels
- OSHA covers buildings under construction, but not completed buildings in service

Discussion

- Investigations in support of litigation
  - Results may be published, or not
  - May be limited in scope
  - Client may require confidentiality
- U.K. CROSS is an excellent system
- Better system needed for the U.S.

Conclusions

- Failure literacy vital for engineers
- Important element of engineering education
- Engineering progress often comes from failures
- Professional and ethical issues in addition to technical issues
- Errors in communication and management

Closing Comments

- Failures have many causes
  - Technical – innovative systems, forgotten mechanisms, pushing the envelope
  - Communications – disconnects between designer, builder, inspector
  - Maintenance and operations
  - Materials and deterioration
- We can learn from each failure
- We can learn from patterns of failure

Acknowledgements

- National Science Foundation Implementation and Assessment of Failure Case Studies in the Engineering Curriculum, National Science Foundation Project DUE-0919487, $ 500,000, August 1, 2009 – July 31, 2013
- American Society of Civil Engineers Technical Council on Forensic Engineering/ Forensic Engineering Division – Education Committee

Beyond Failure – all proceeds to the Isabella and Joe Delatte education fund and Norb and Lynn Delatte second honeymoon fund

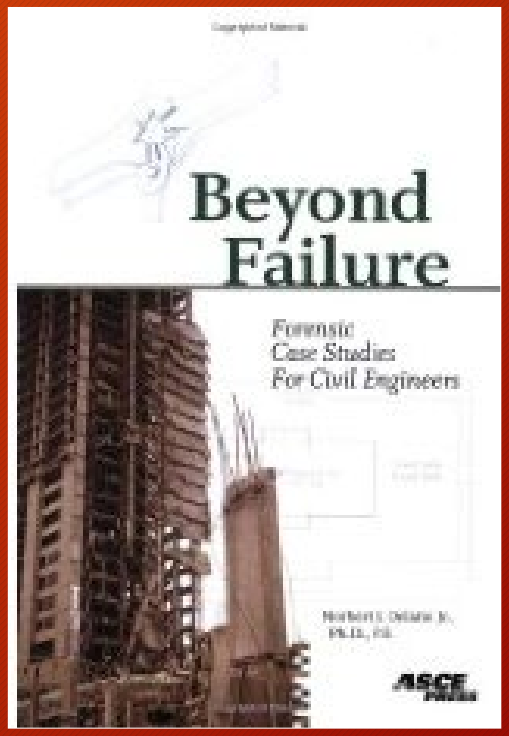

Questions?