Protecting Feeders With Distributed Resource

Scott Elling – HDR Inc.

Background

- Several Hundred Mega Watts of distributed PV
- Distribution Grid is no longer radial
- Protection Considerations

Agenda

- Quick Review
- Protection considerations
- Reclosing
- Inverters vs Rotating Mass
- Challenges
- Directionality with PV

Protection Considerations

- Complete coverage
  - Relay Reach

- Minimize outages

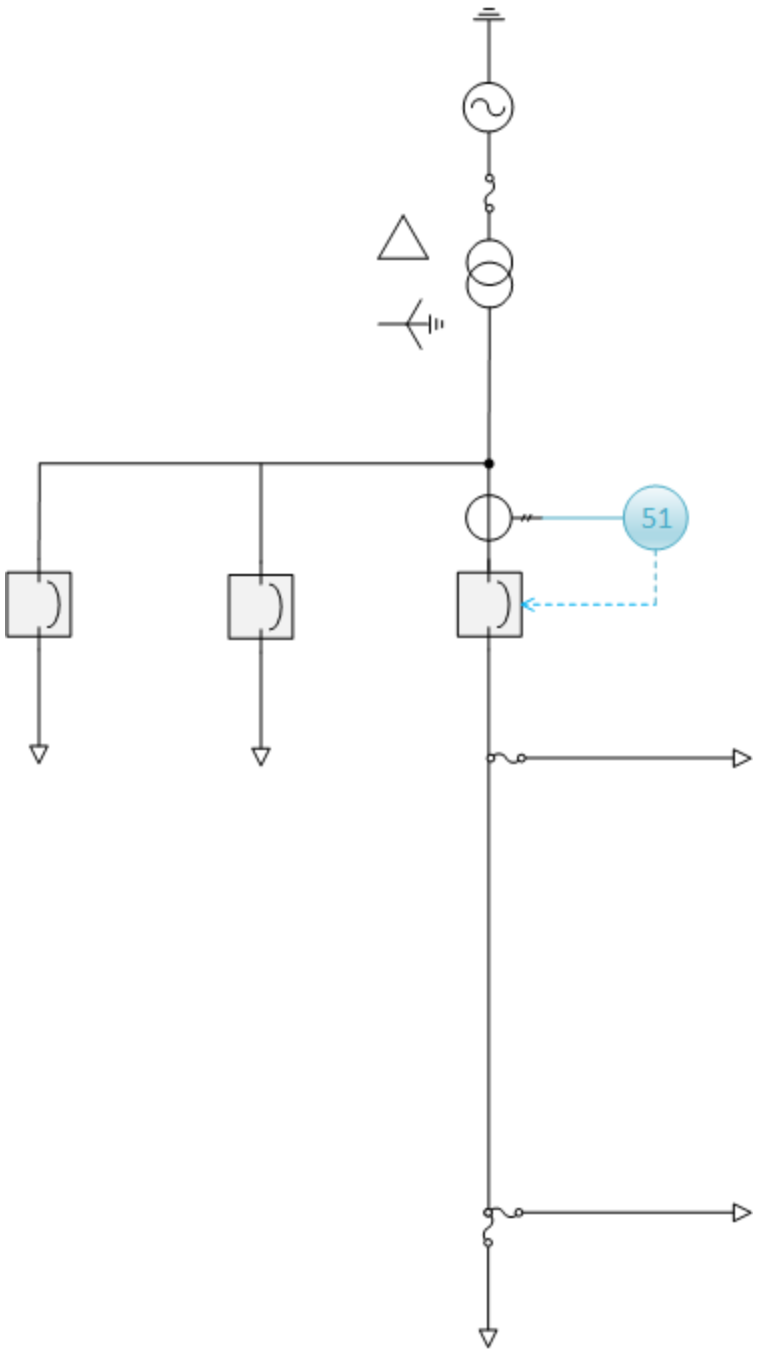

Protective Reach

- No Dead Zones

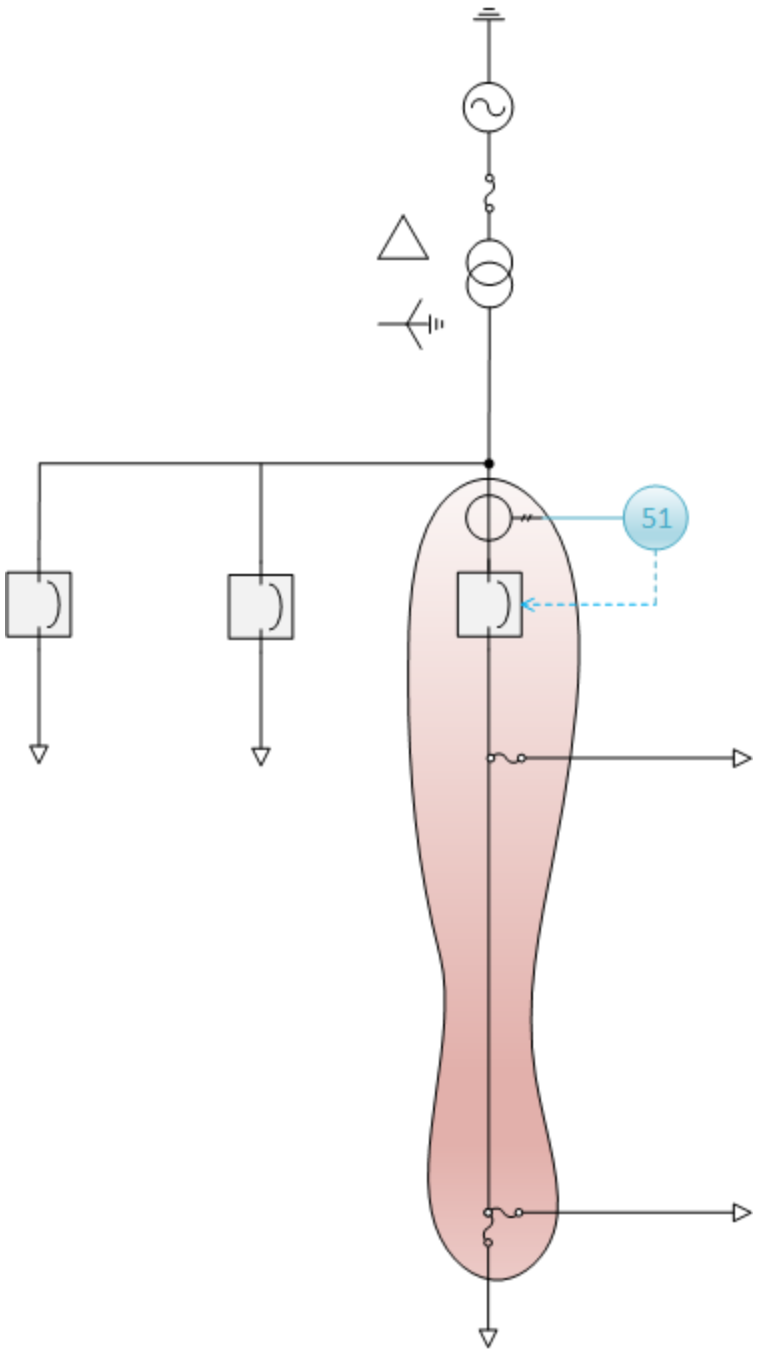

Protective Reach

- No Dead Zones
- Verify Relay trips for Ph-Ph Fault

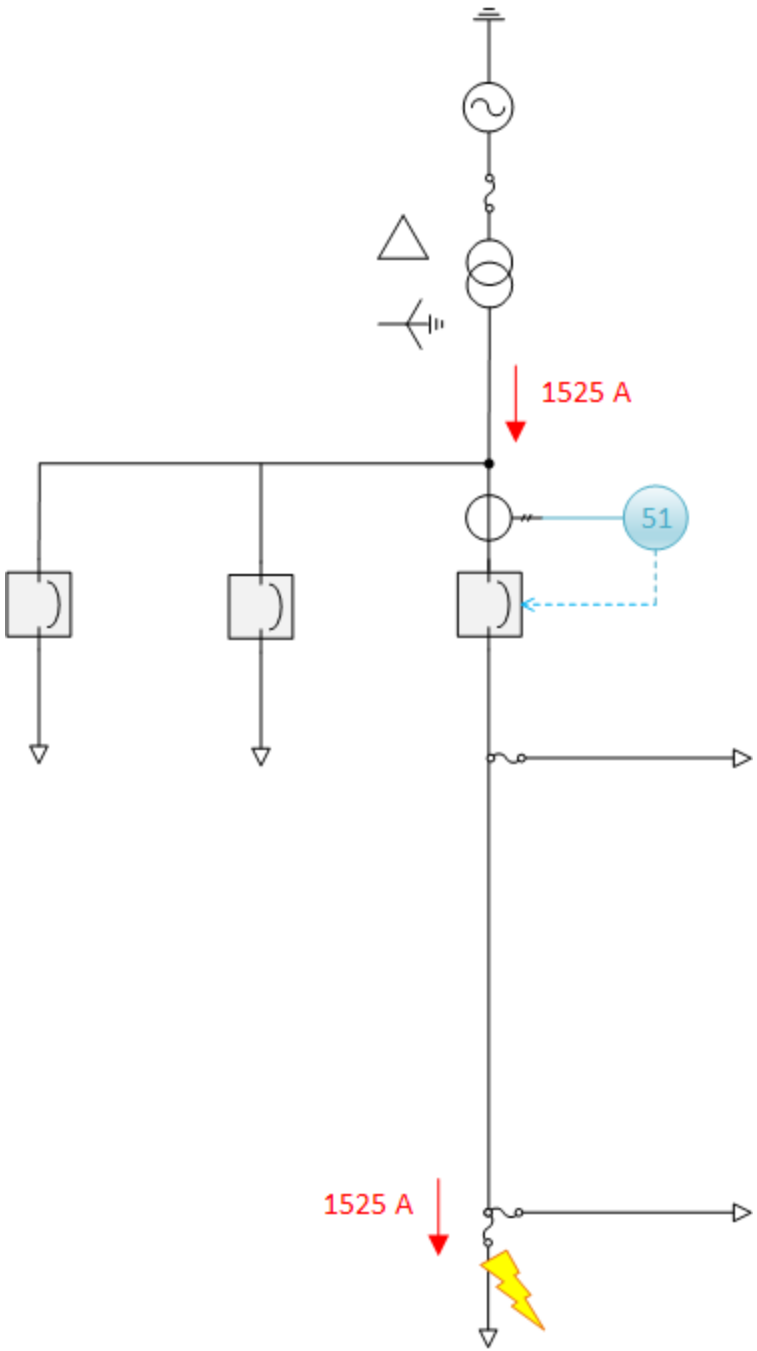

Protective Reach

- No Dead Zones
- Verify Relay trips for Ph-Gr Fault

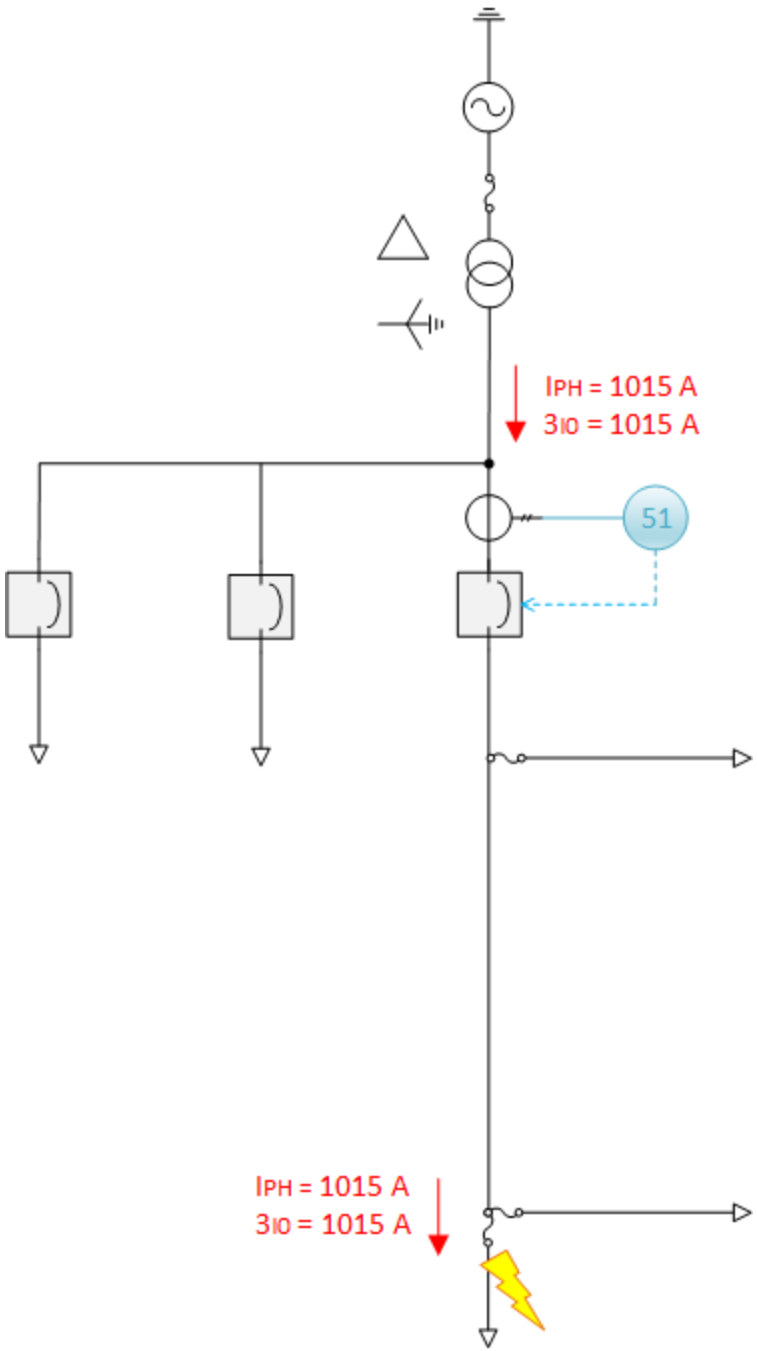

Protective Reach

**Plotted in CAPE*

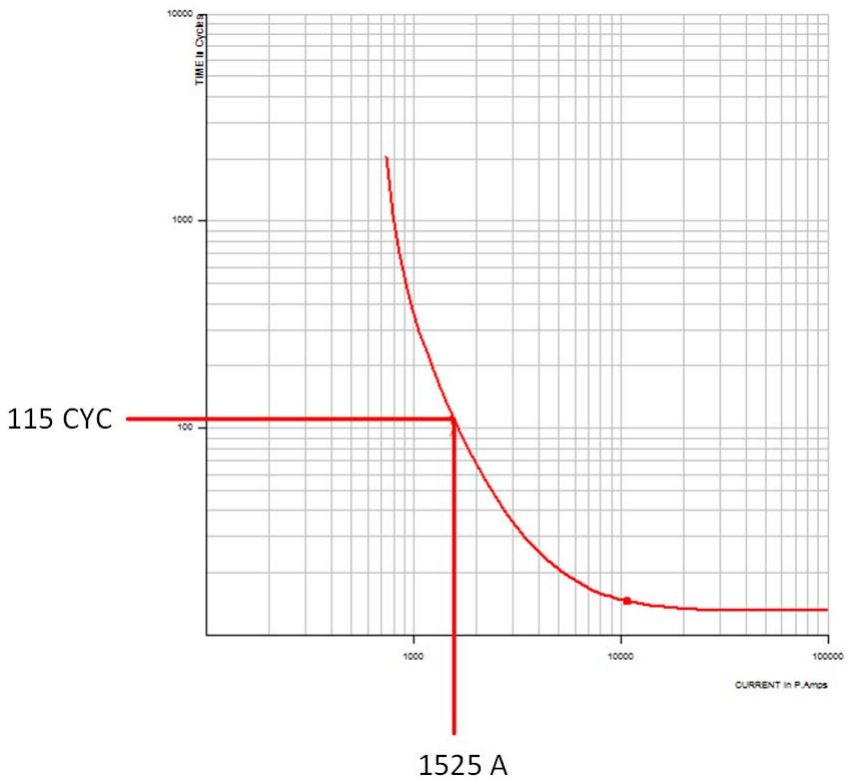

Ph-Ph

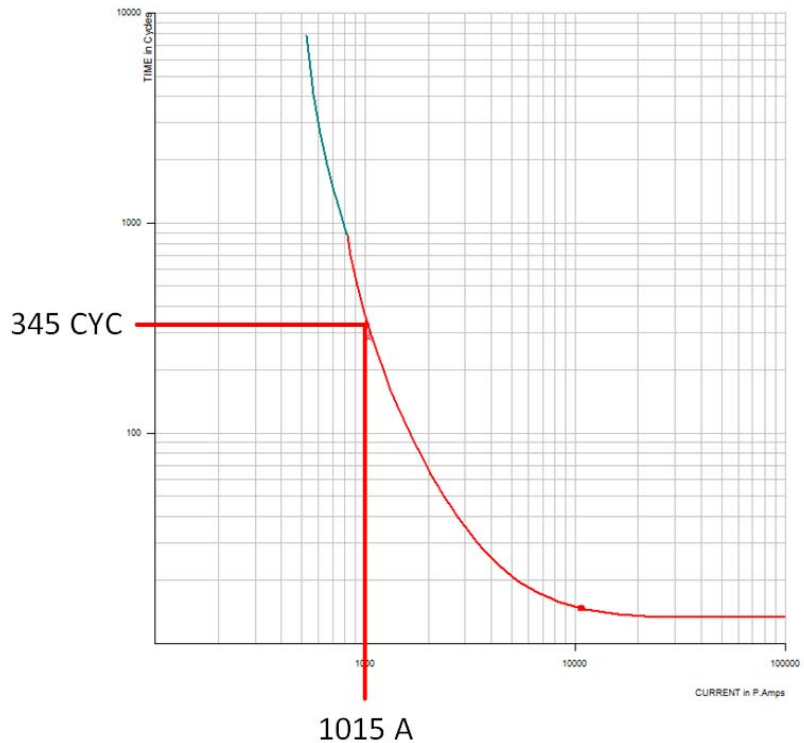

Ph-Gr

Minimize Outages

- Selectivity
- TOC Coordination
  - Upstream
  - Downstream

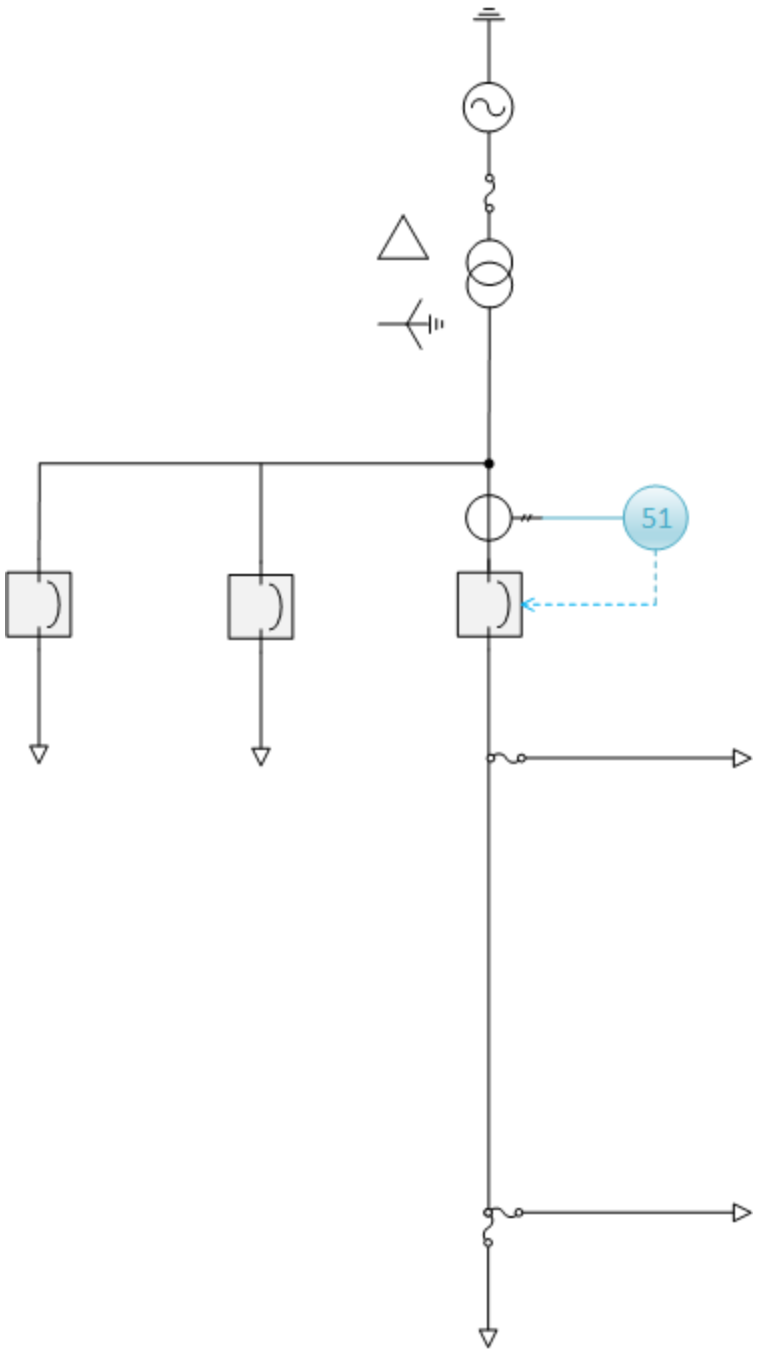

Upstream TOC Coordination

- Trip feeder before transformer fuse begins to melt

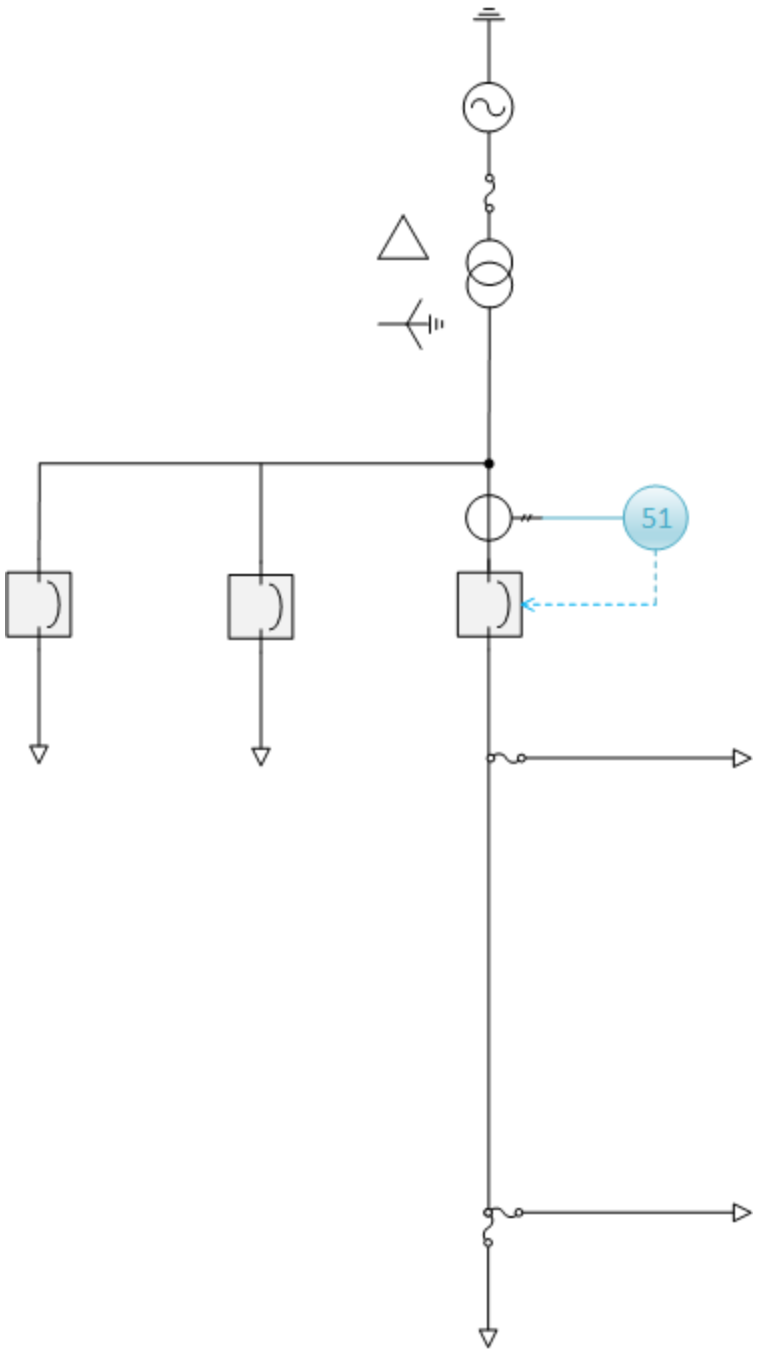

Upstream TOC Coordination

- Trip feeder before transformer fuse begins to melt
- Verify Ph-Ph Fault

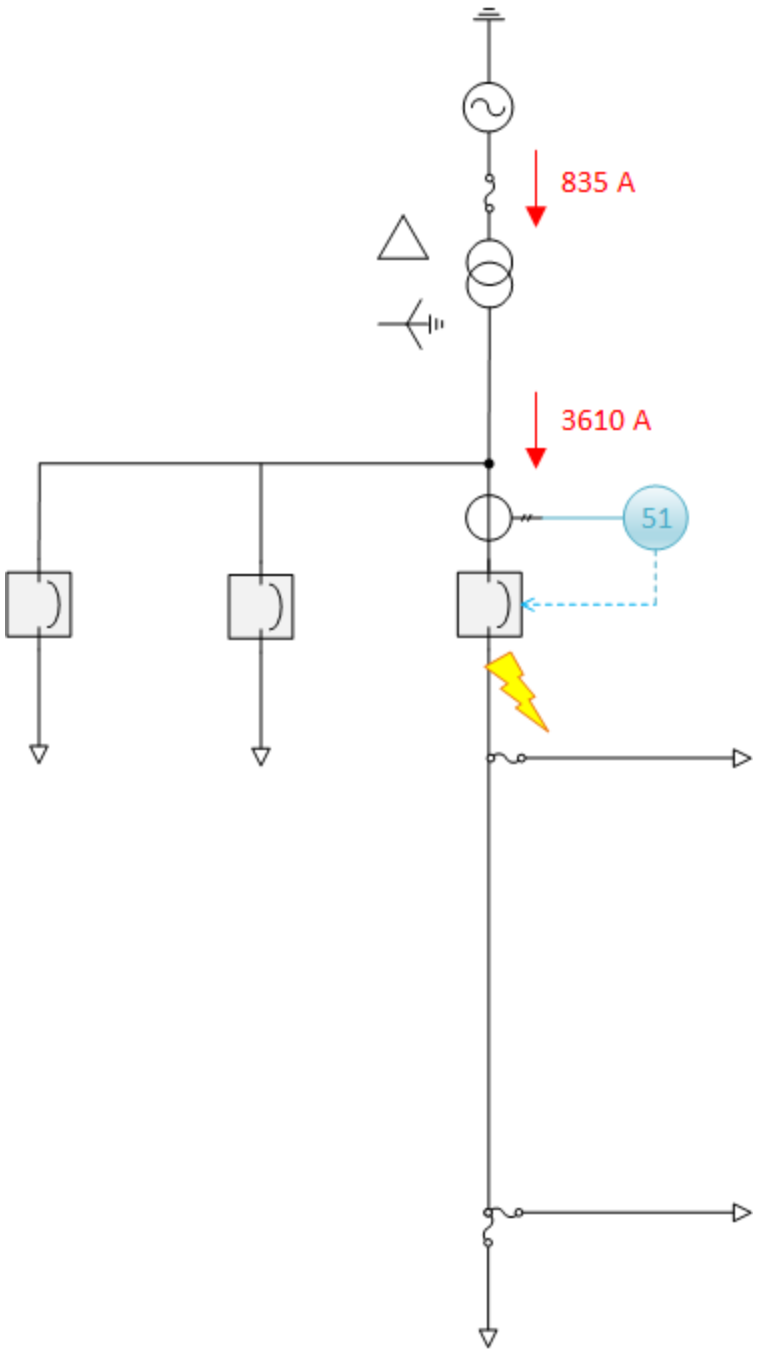

Upstream TOC Coordination

- Trip feeder before transformer fuse begins to melt

- Verify Ph-Gr Fault

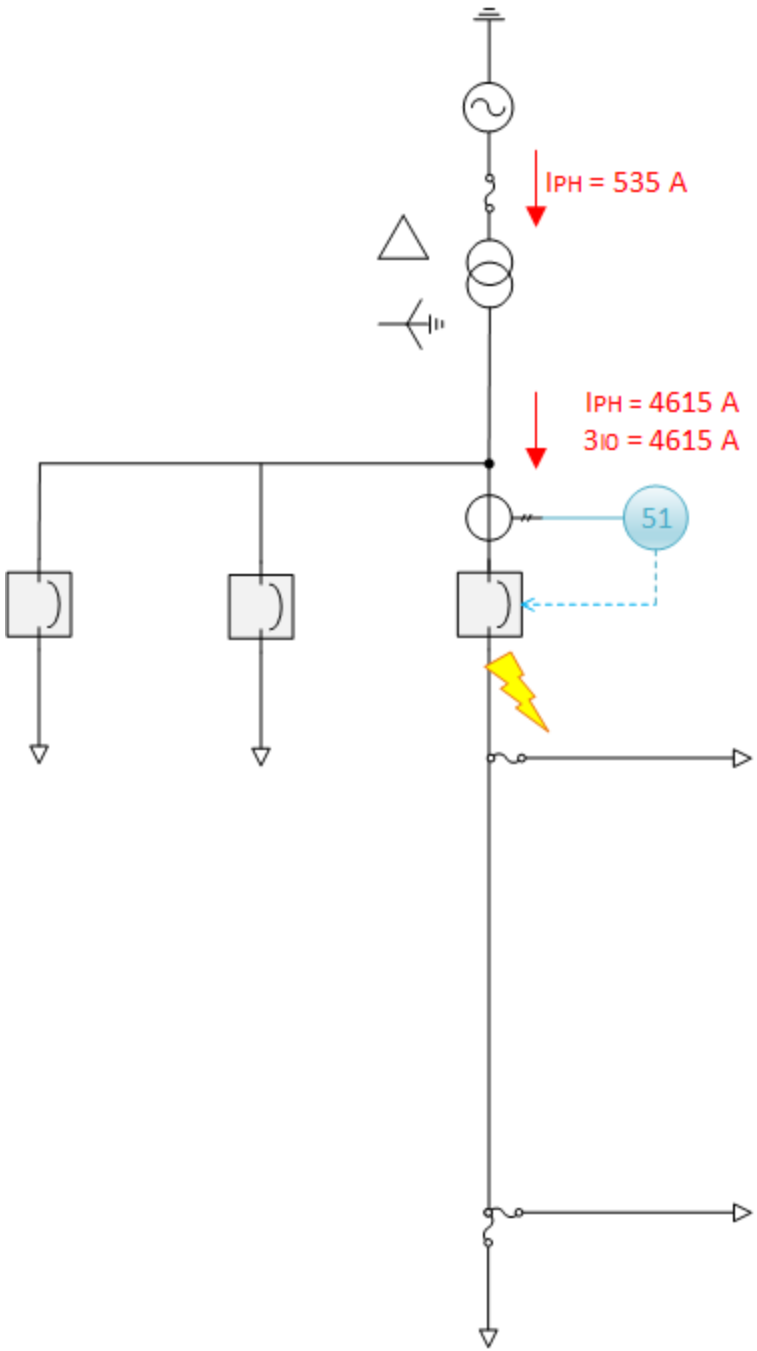

Upstream TOC Coordination

**Plotted in CAPE*

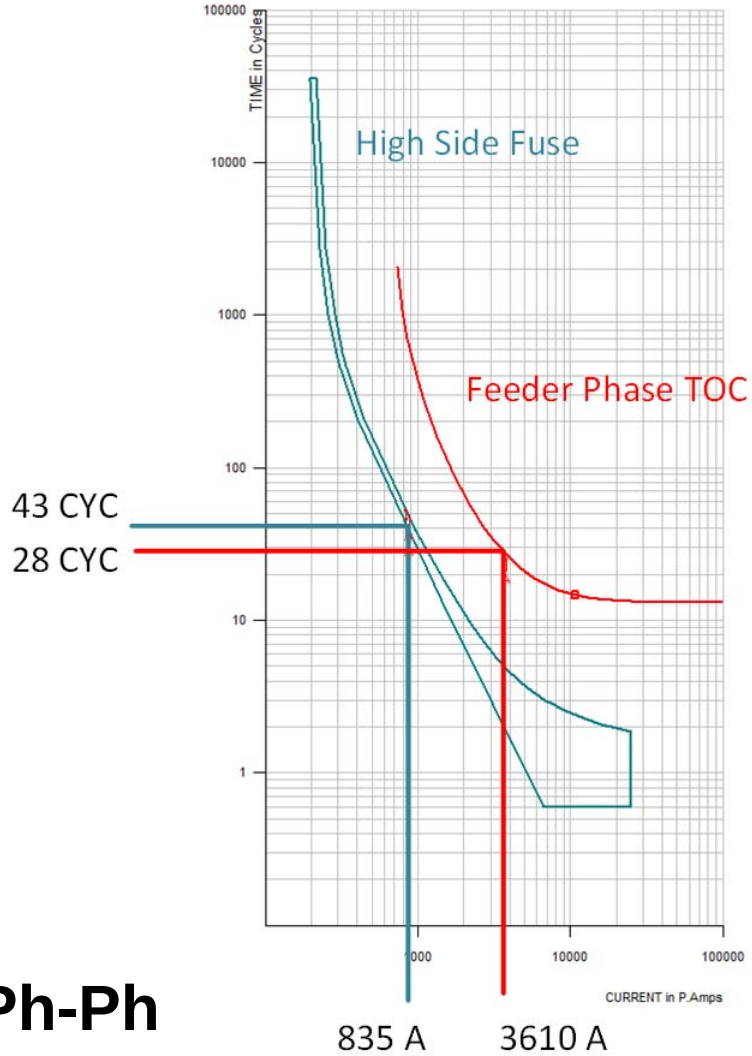

Ph-Ph

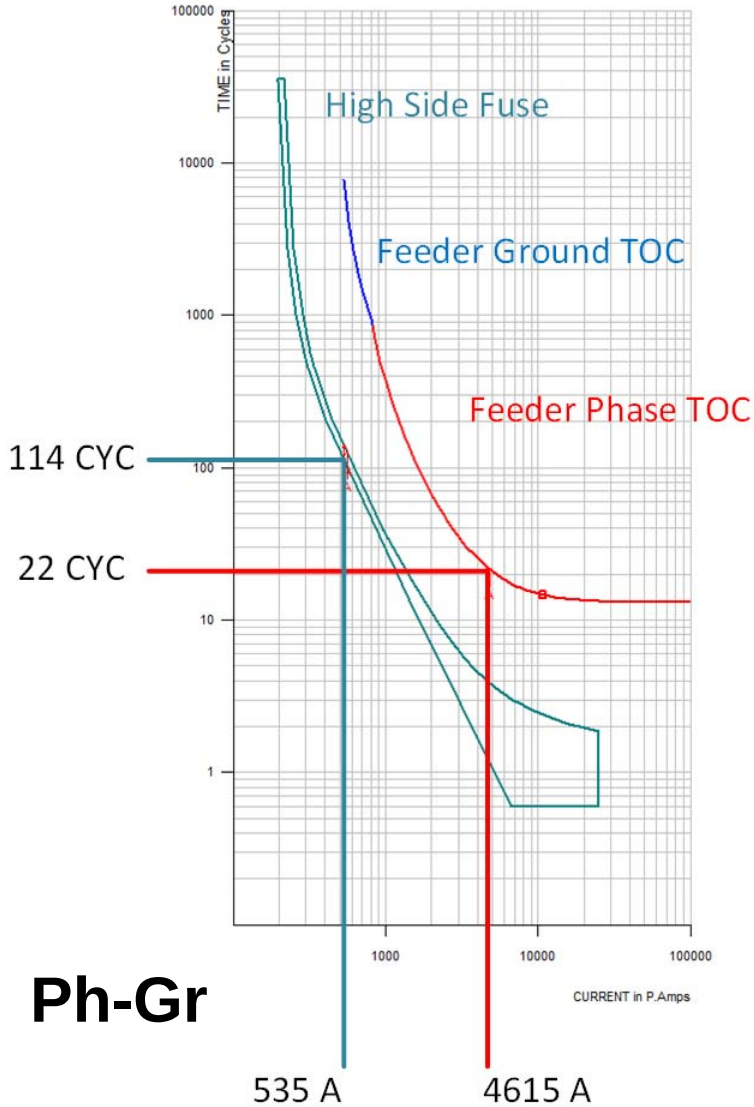

Ph-Gr

Downstream TOC Coordination

- Fuse should melt before feeder relay sends trip
- Trip Saving Scheme

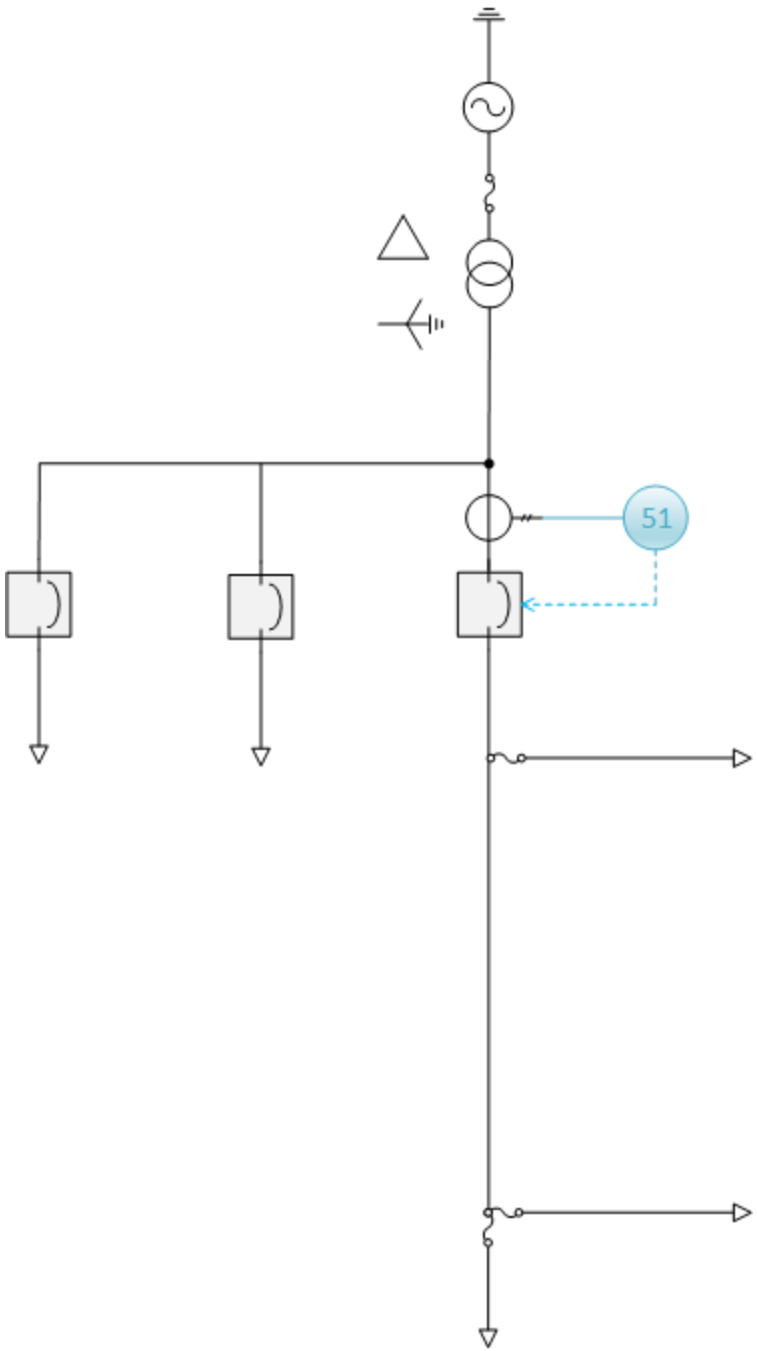

Downstream TOC Coordination

- Fuse should melt before feeder relay sends trip
- Trip Saving Scheme
- Verify 3-Ph Fault

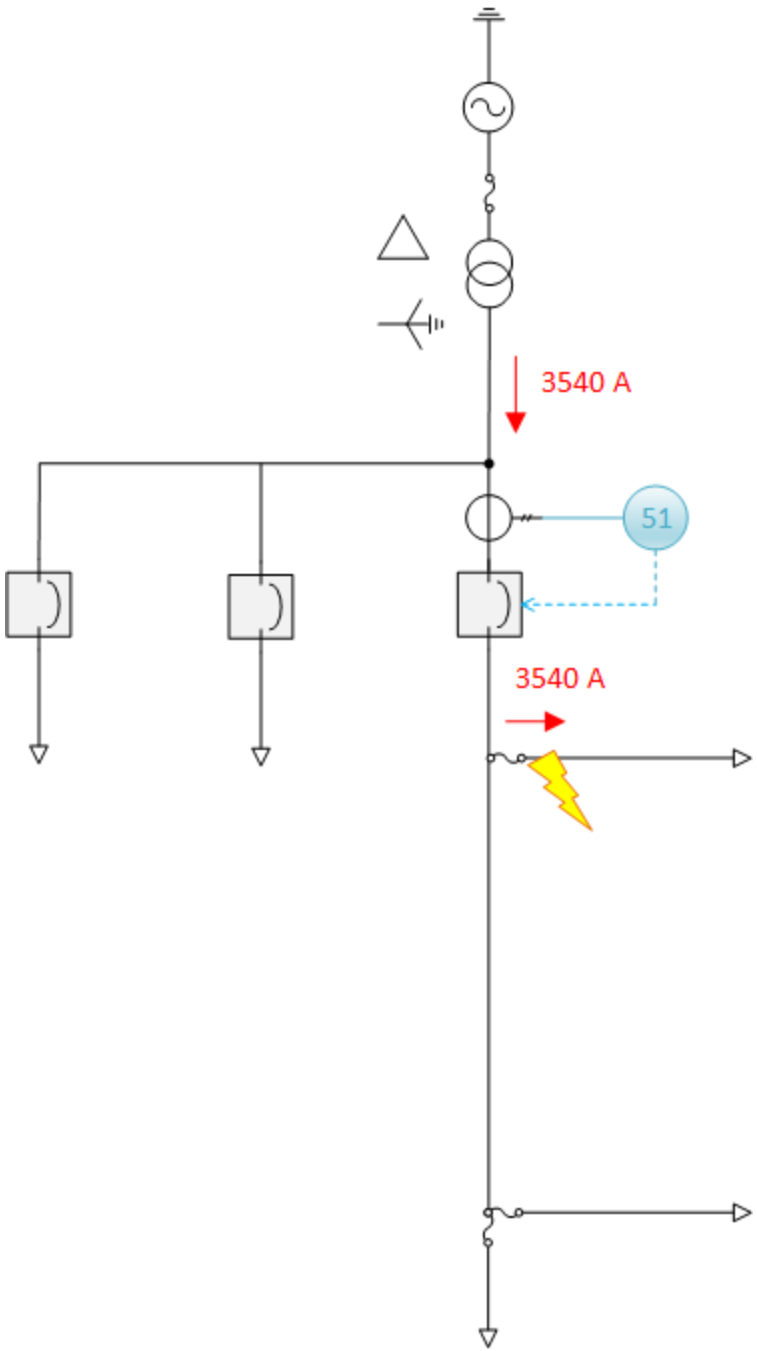

Downstream TOC Coordination

- Fuse should melt before feeder relay sends trip
- Trip Saving Scheme
- Verify Ph-Gr Fault

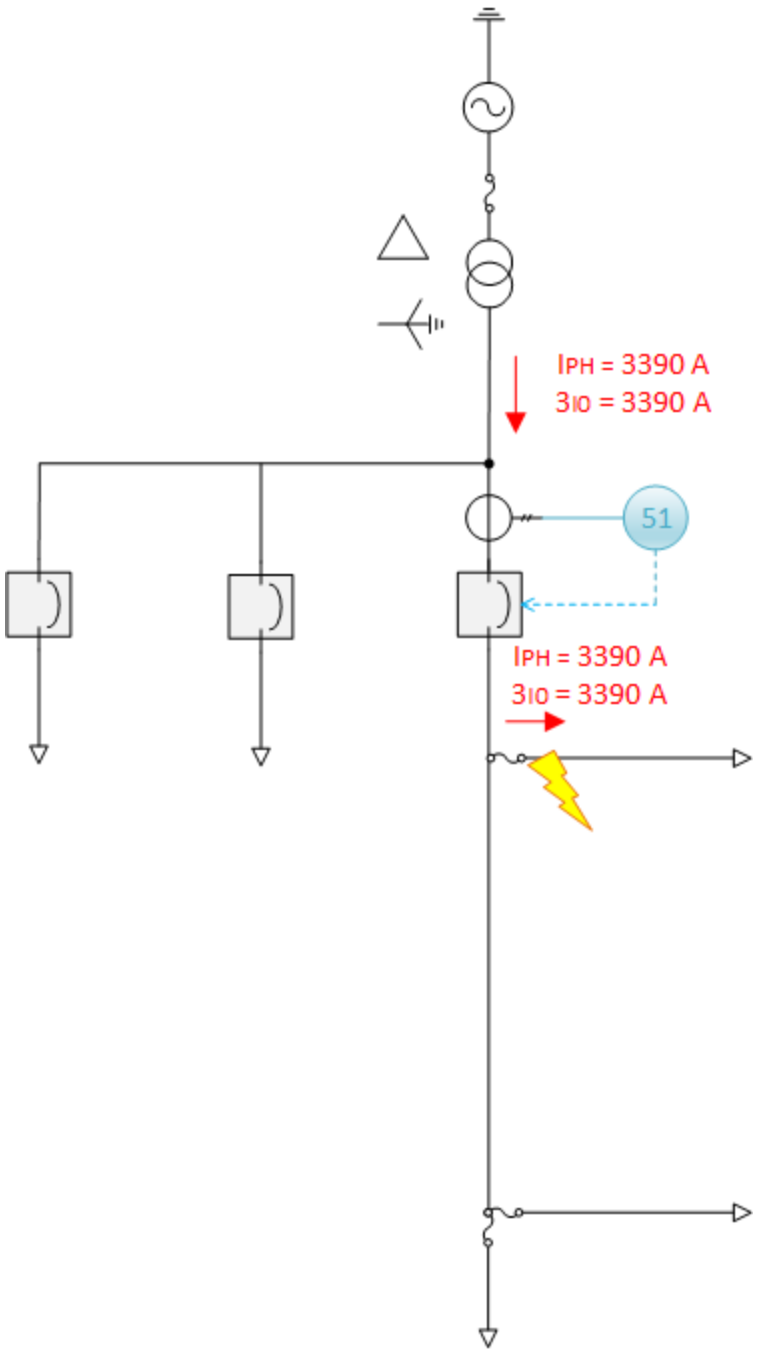

Downstream TOC Coordination

**Plotted in CAPE*

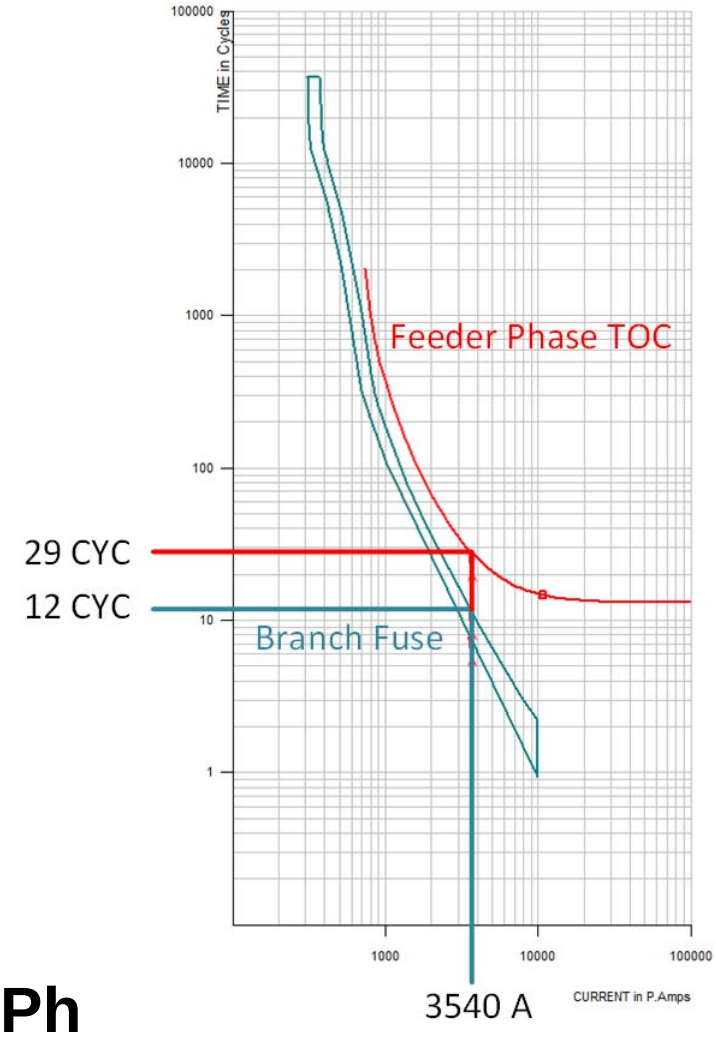

3-Ph

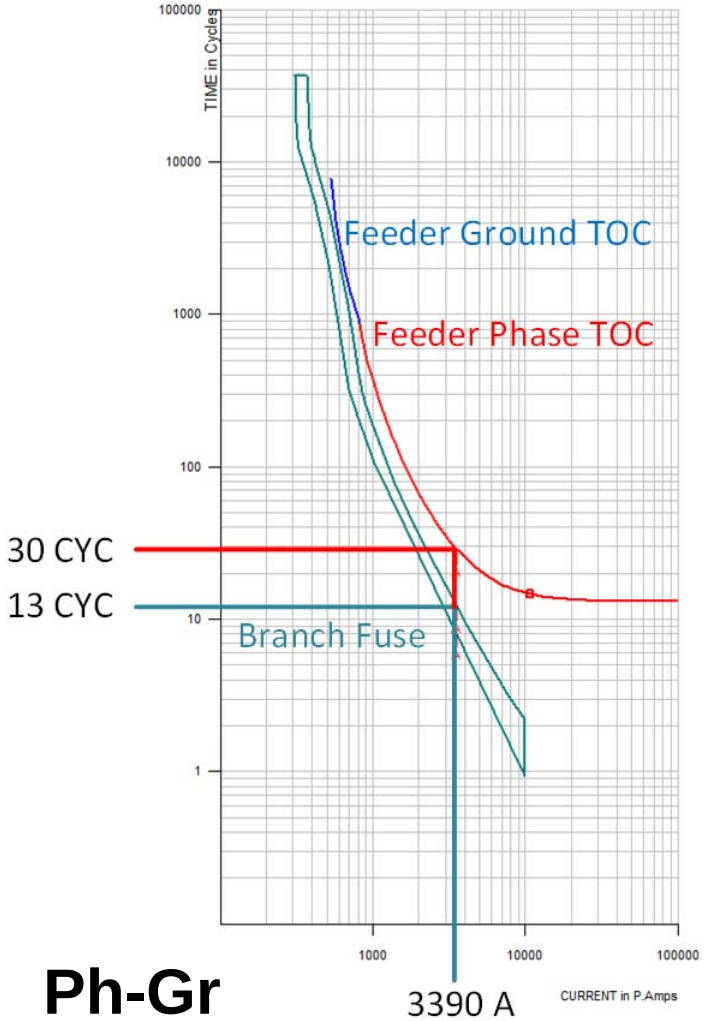

Ph-Gr

What happens when we add PV?

- How is relay reach affected?

- How TOC coordination affected?

Effects on Relay Reach

- Infeed
  - Accounts for a portion of the voltage drop to the fault
  - Fault current provided by Substation reduces

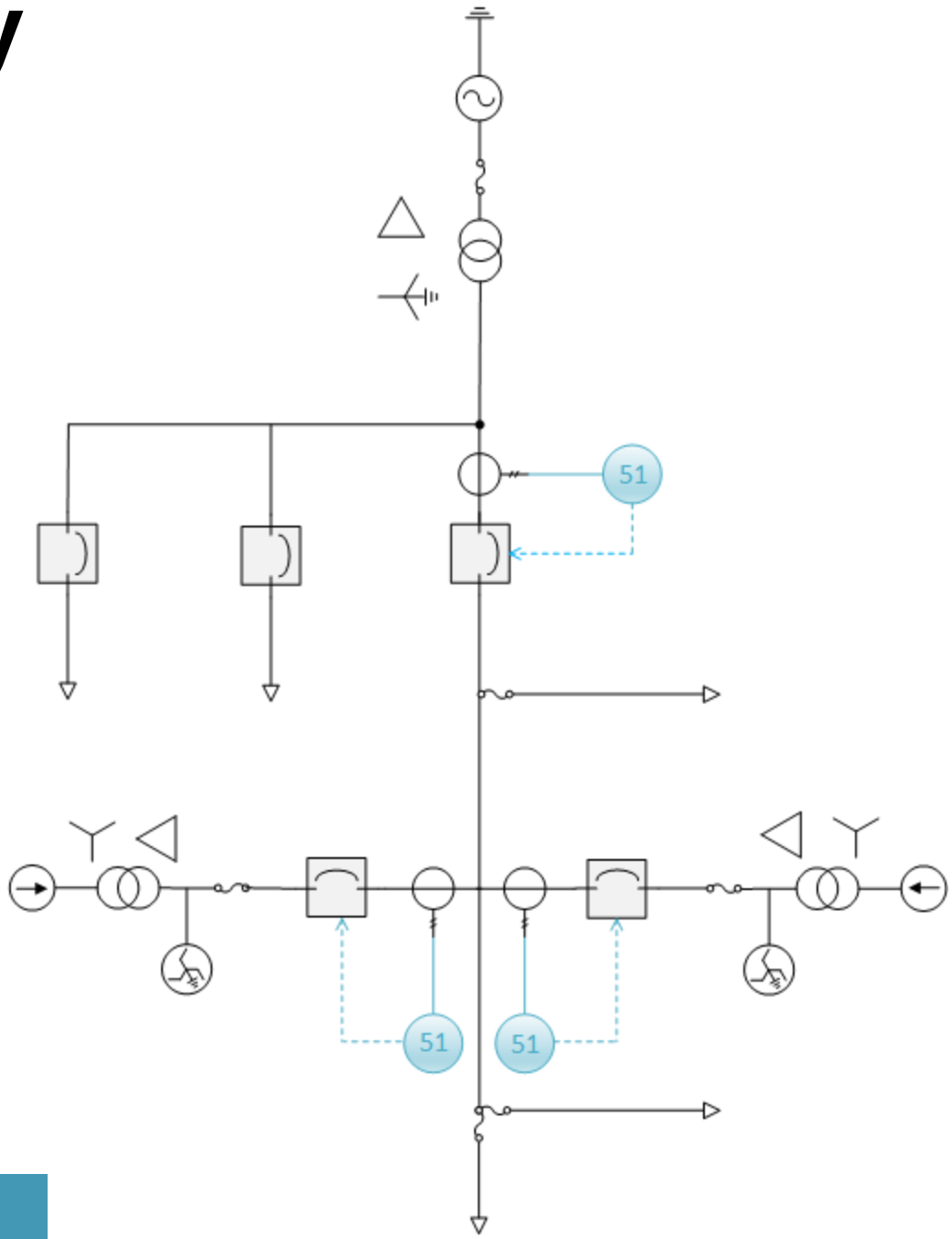

Effects on Relay Reach

- Infeed
  - Accounts for a portion of the voltage drop to the fault
  - Fault current provided by Substation reduces
  - Recheck Ph-Ph Fault

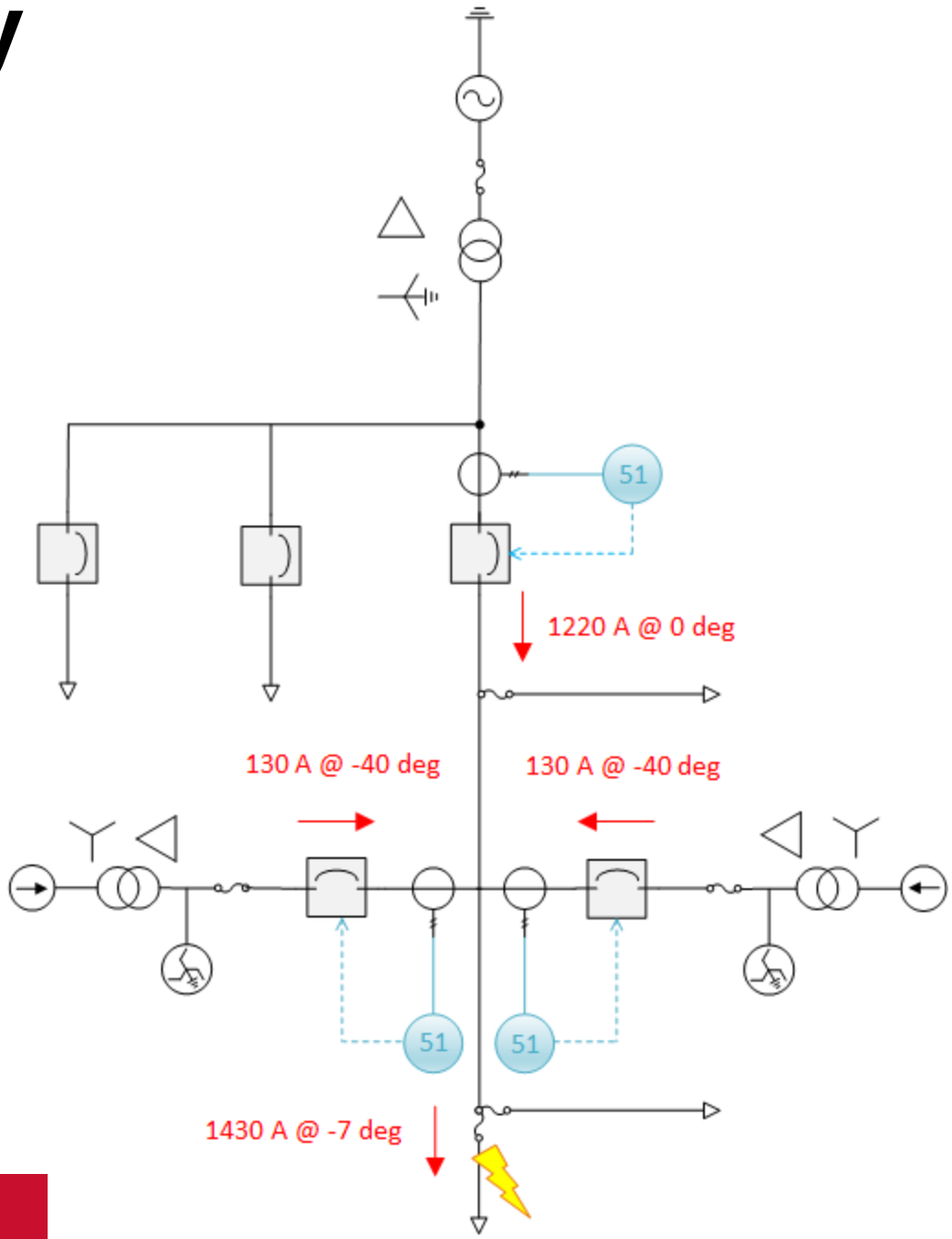

Effects on Relay Reach

- Infeed
  - Accounts for a portion of the voltage drop to the fault
  - Fault current provided by Substation reduces
  - Recheck Ph-Gr Fault

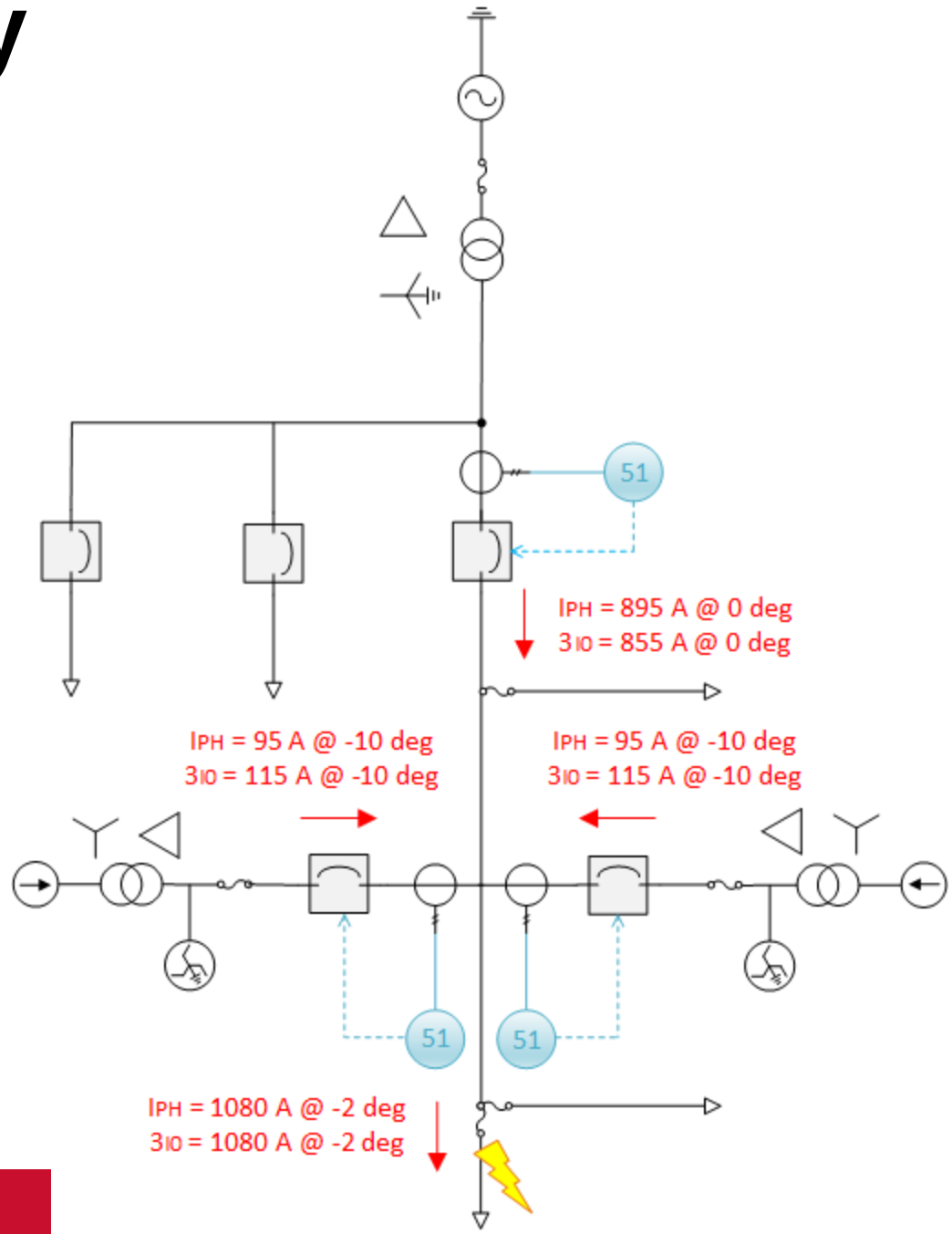

Effects on Relay Reach

**Plotted in CAPE*

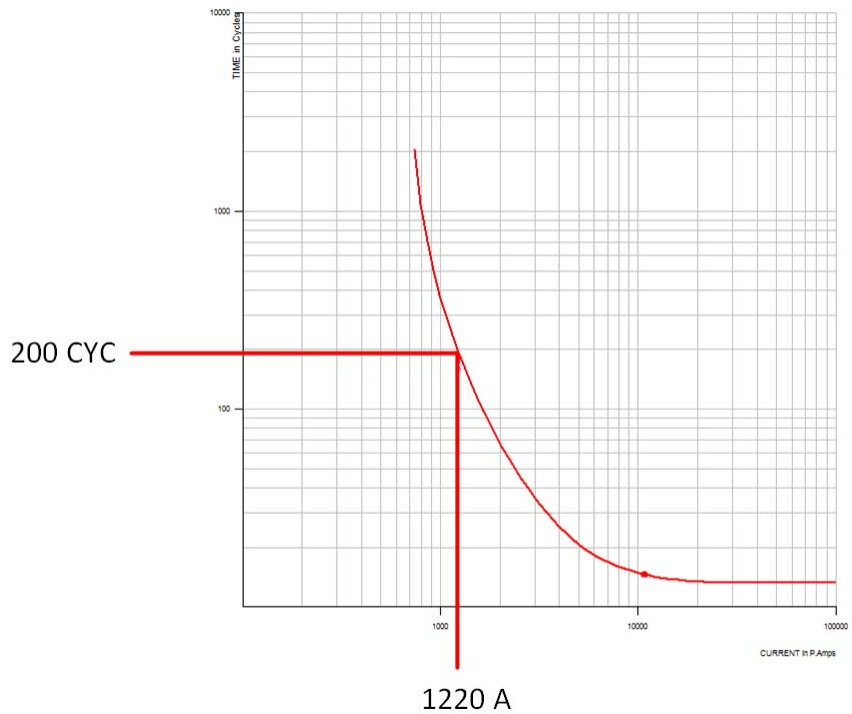

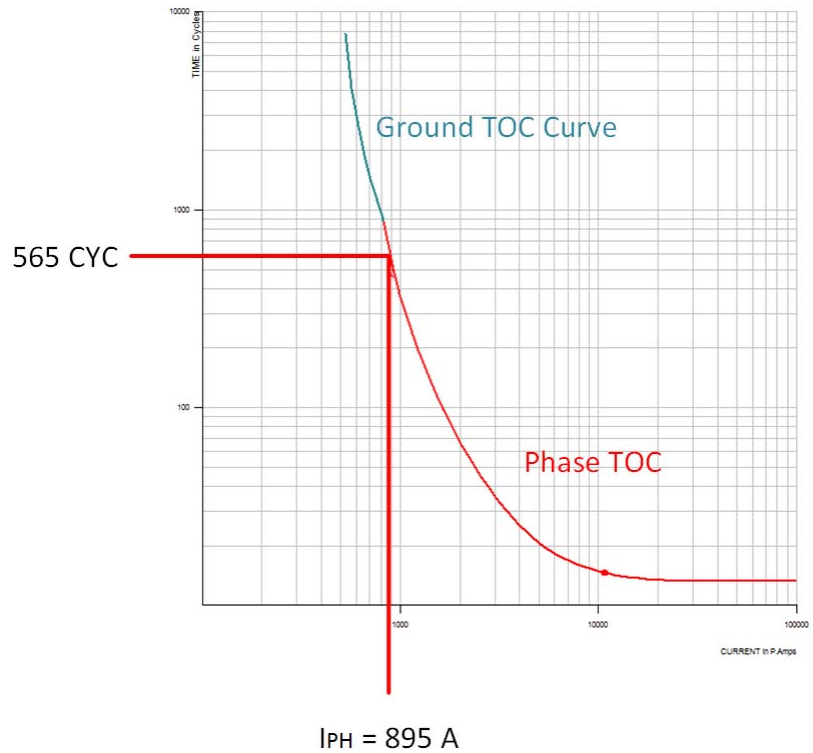

Ph-Ph

Ph-Gr

Effects on Relay Reach

- The infeed desensitizes the Substation relay
- Fault clearing times could become very high
- The relay might not reach the entire zone of protection

Does it adversely affect coordination?

- Source is intermittent
- We need to protect for the worst case
- PV may only be used against you

PV may only be used against you

- Remove infeed to downstream devices when coordinating with Substation Relay

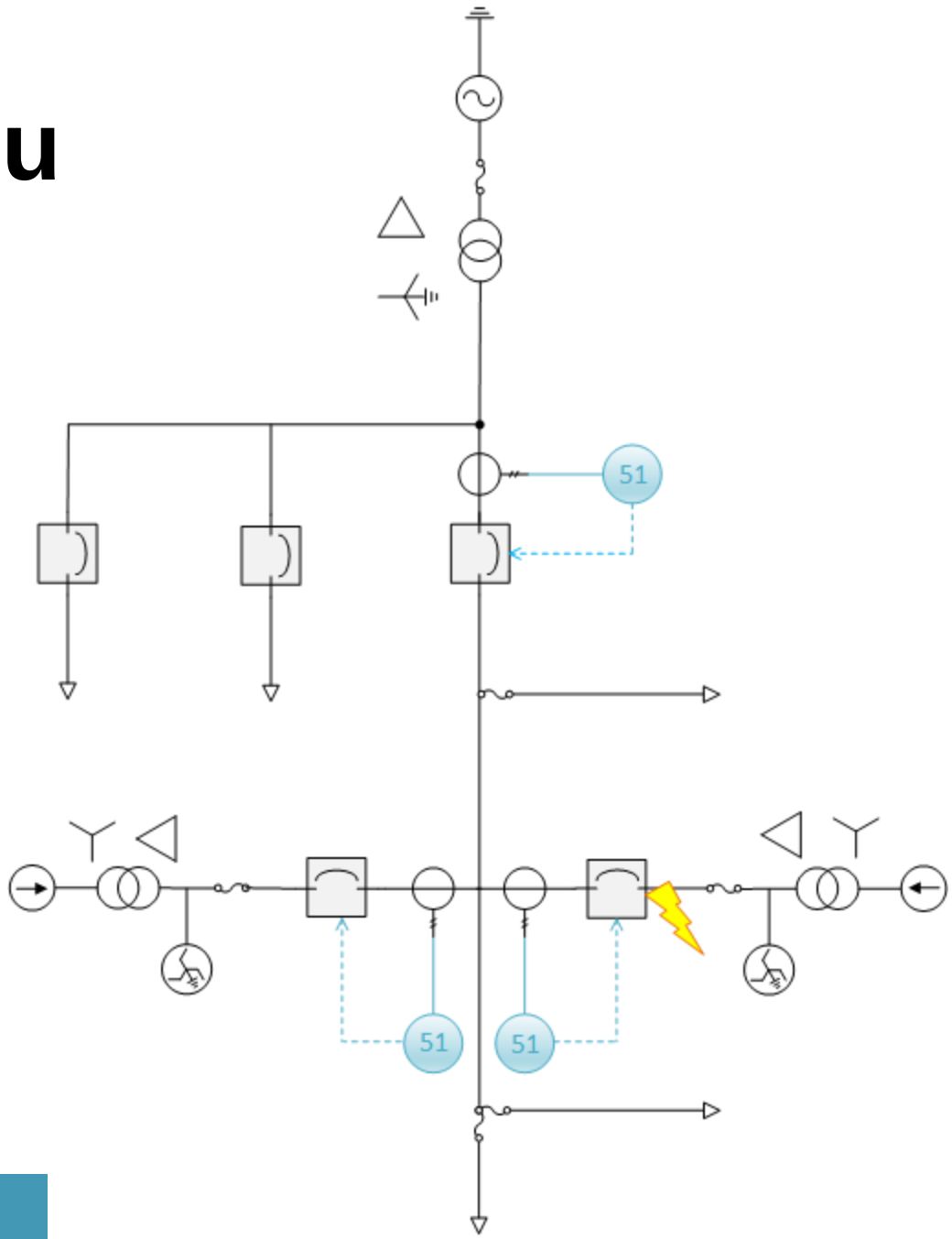

PV may only be used against you

- Remove infeed to downstream devices when coordinating with Substation Relay

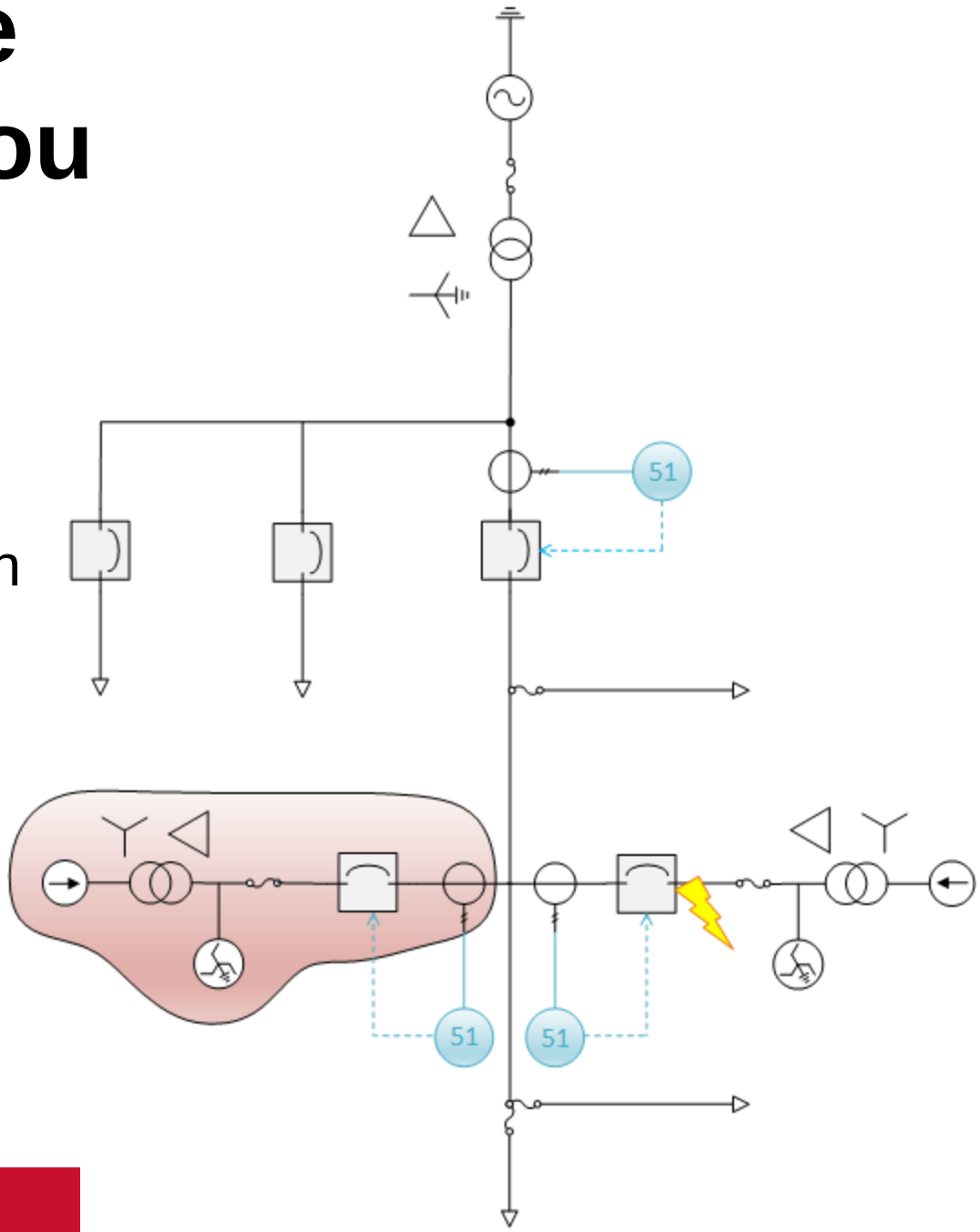

PV may only be used against you

- Do not remove the PV when coordinating the feeder reclosers with downstream fuses

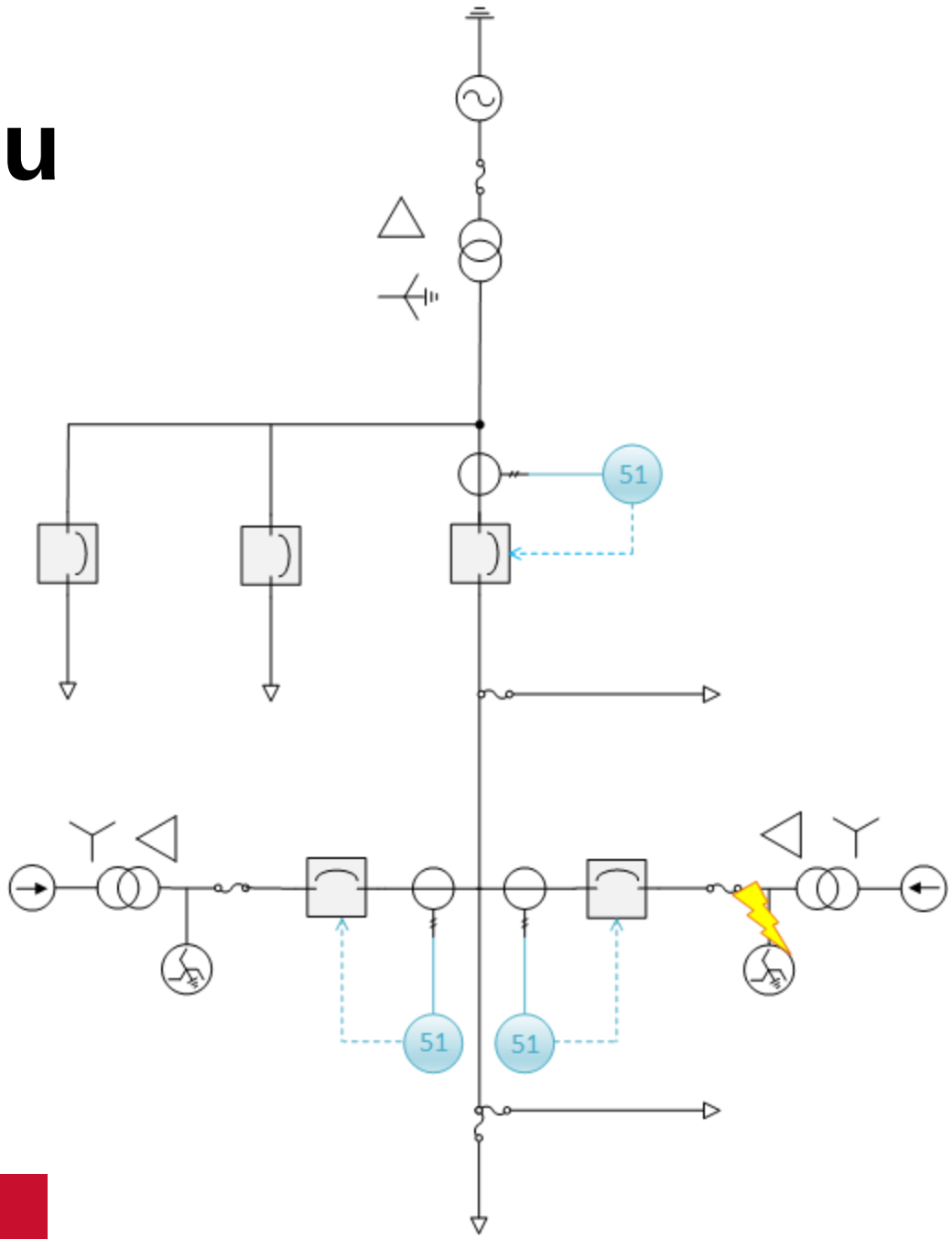

Time in Cycles	Before	After
Reach Trip Time Ph-Ph	115	200
Reach Trip Time Ph-Gr	345	565
Upstream CTI	15	15
Downstream CTI	17	17

*CTI: Coordination Time Interval

Coordination and Reach Summary

Inverters vs Rotating Mass

- PV behaves like a current source
- Inverters have no inertia
- Zero-sequence and negative-sequence current suppressed
- Positive-sequence current limited

Sequence Networks

- $I_{1,PV}$ limited
- $I_{2,PV}$ suppressed
- $I_{0,PV}$ exists via Ground Transformer

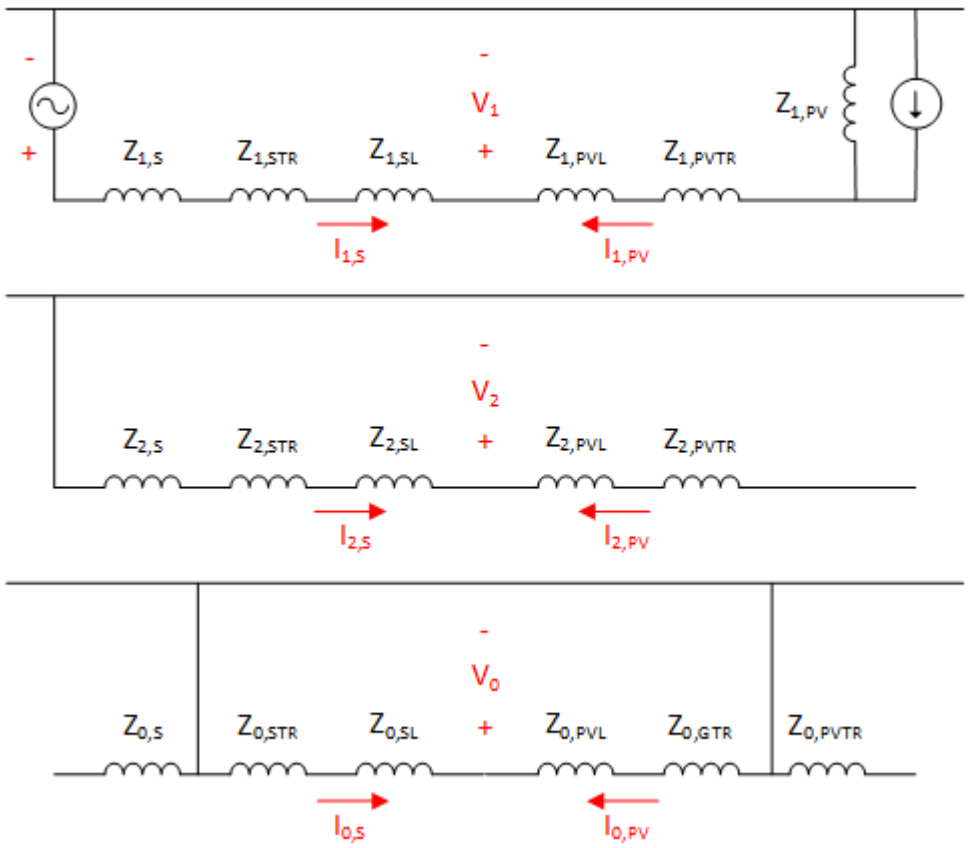

Sequence Networks

- $I_{1,PV}$ limited
- $I_{2,PV}$ suppressed
- $I_{0,PV}$ exists via Ground Transformer

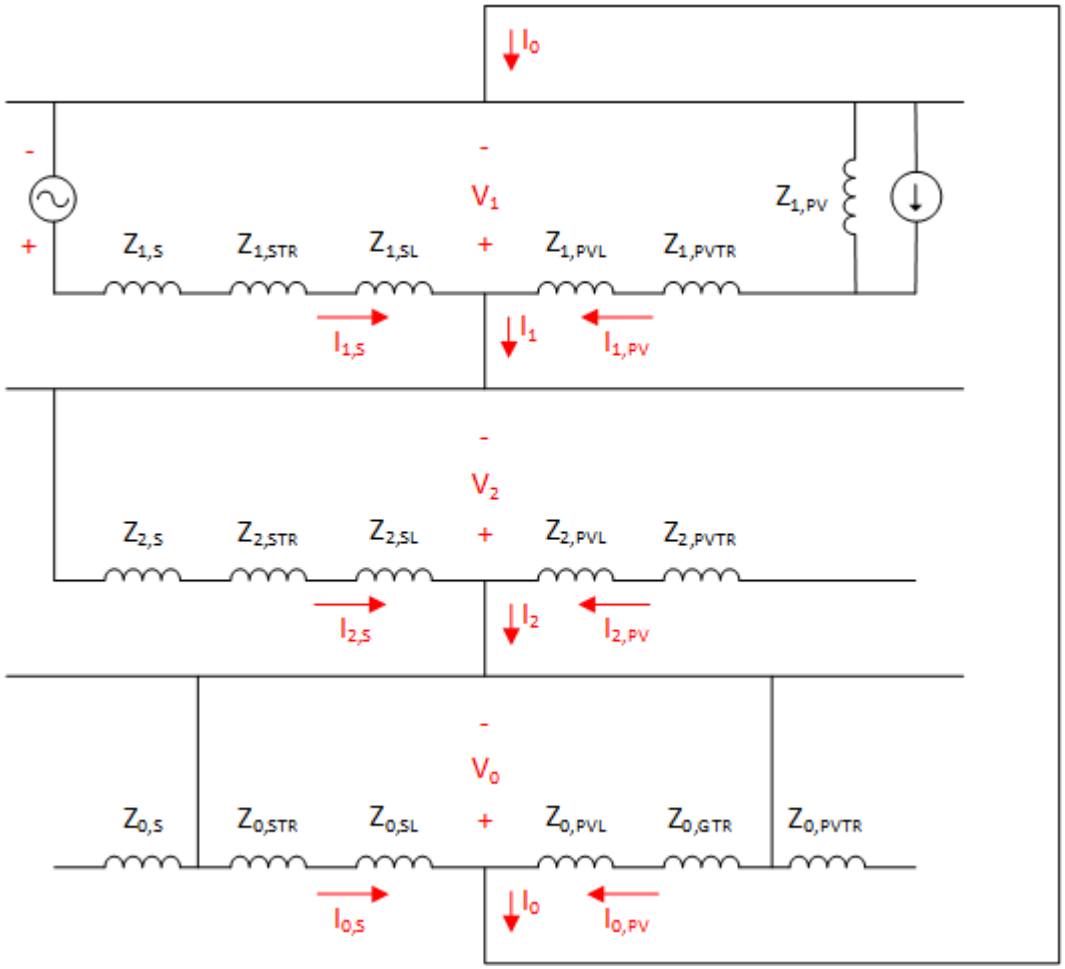

Ph-Gr Fault

Sequence Networks

$I_{1,PV}$ limited

$I_{2,PV}$ suppressed

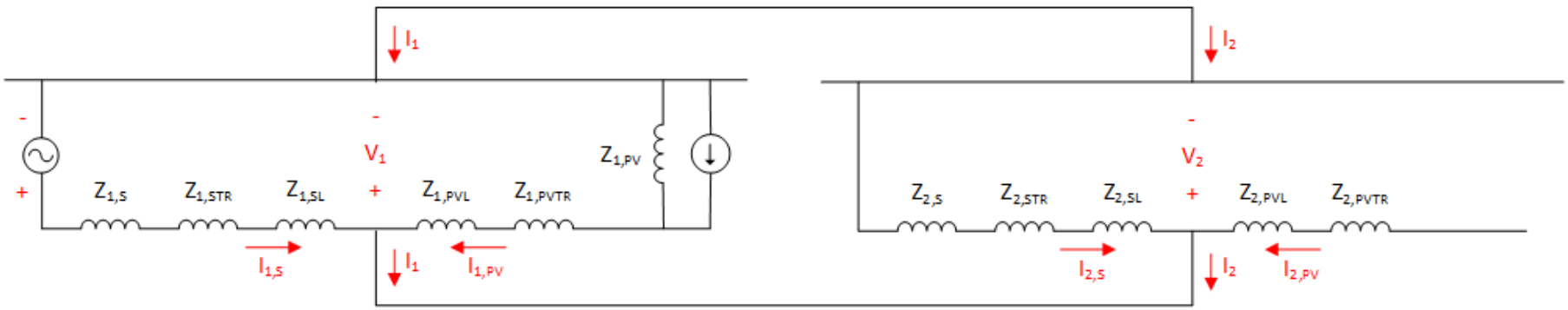

Ph-Ph Fault

DER Employs Anti-Islanding

- IEEE 1547 states DER should shut down in less than two seconds if Utility source is lost

- UL 1741 certification

Transfer Trip

- Rotating Mass on same distribution grid
- Transfer Trip to avoid islanding

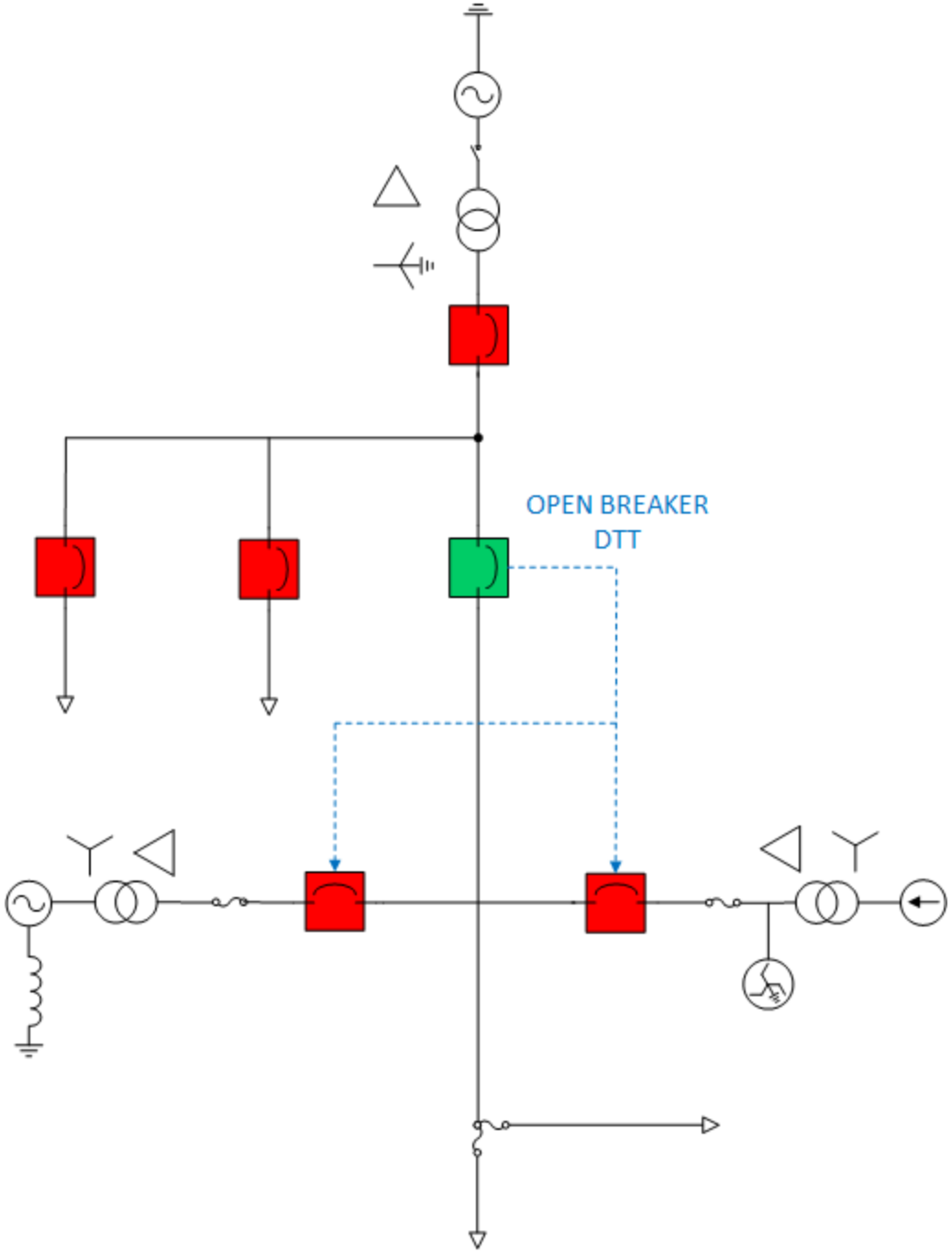

Reclosing Considerations

- Distributed resource includes Anti-Islanding Protection
- Do not reclose before the Anti-Islanding operates
- Load-to-Generation ratio – Supervision may not be necessary if the minimum load exceeds the DER by an adequate threshold

Supervision Options

- Dead Line Only
- Hot Bus – Dead Line
- Synchronous Voltage
- Potential Required
- Be mindful of upstream reclosing

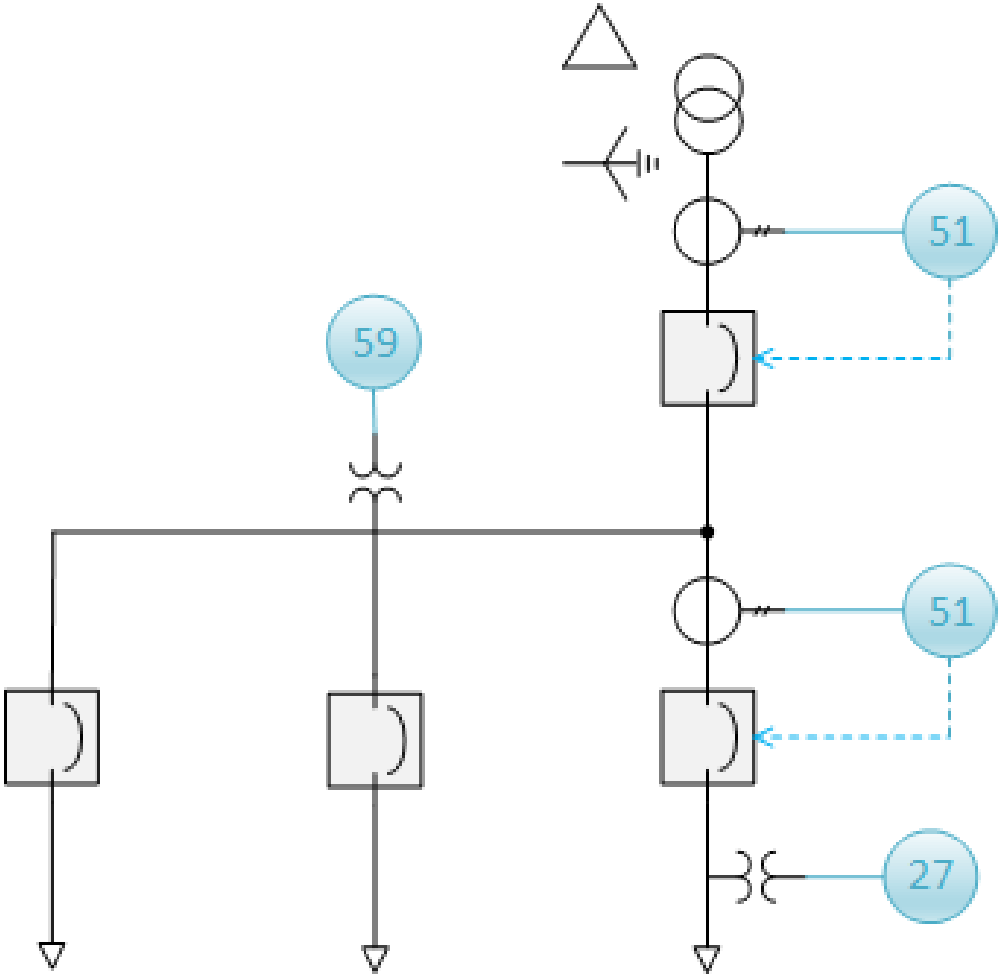

Substation Considerations

- Use caution with ATO Schemes
  - Allow Anti-Islanding Protection to operate before throwing over to Back-up Transformers
  - Add supervision or a time delay to operation

- Ensure voltage regulators support bi-directional flow and set them accordingly

Challenges Encountered

- Modelling the PV DER
  - Gathering necessary information in allotted time
  - Nonconventional system parameters

- Quantity of installations over limited time period
  - Hundreds of MW installed in a 2 year span

Challenges Encountered

- Smaller fused distribution transformers leave very little or no budget to squeeze consecutive protective zones
  - Transformer fuse to Feeder relay to downstream recloser to solar garden fuse
- Some reclosers fit the desired standard installation better than others
- Sorting out whether issues were existing or caused by the PV insertion

Should directionality be utilized?

- Reverse looking directional element set more sensitive than non-directional element
  - PV will not provide negative sequence current

- Reverse looking directional element to supervise reclosers
  - Directionality is inherent simply based on magnitude
  - PV supplies 1.1 – 1.3 p.u. current under fault condition

Questions?

System Parameters

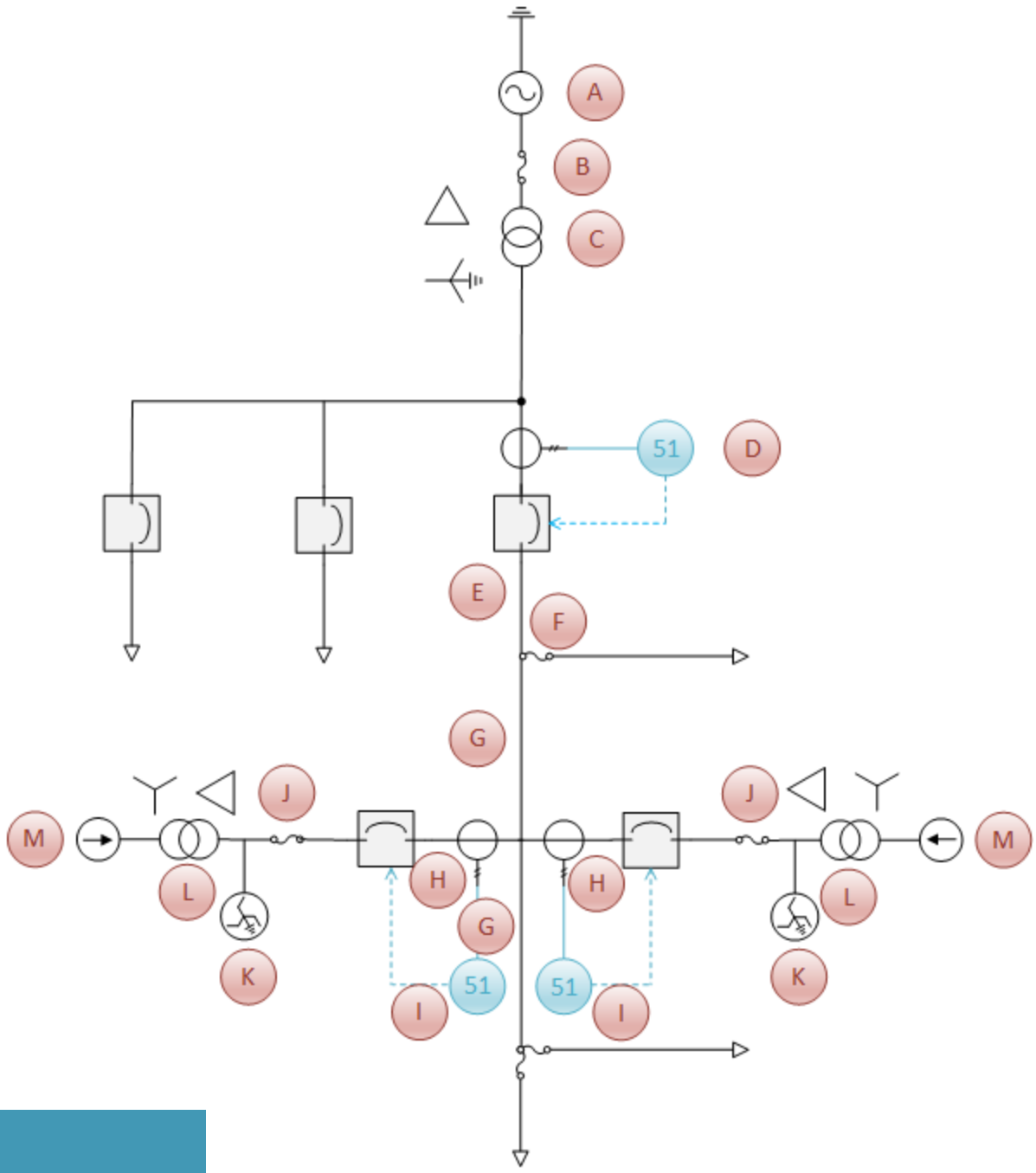

System Parameters

A - Source

Voltage	69 kV
MVA	100
R_1	0.04201 pu
X_1	0.16803 pu (Subtransient)
R_0	0.03151 pu (Subtransient)
X_0	0.1890 pu

B - High Side Fuse

Speed Class	Slow
Designation	100E

C - Distribution Transformer

69 kV – 13.8 kV

Dyg1

MVA	8.4/10.5
Z_1	7%
Z_0	6%

D - Feeder Relay TOC Curves

Phase Pick-up	672 A
Phase Time Dial	1.2
Phase Curve	U.S. Inverse
Ground Pick-up	480 A
Ground Time Dial	7
Ground Curve	U.S. Very Inverse

System Parameters

E - Line Segment

R_1	0.07194 pu
X_1	0.17223 pu
R_0	0.24890 pu
X_0	0.60360 pu

F - Branch Fuse

Speed Class	T
Designation	140T

G - Line Segment

R_1	0.57551 pu
X_1	1.37786 pu
R_0	1.99118 pu
X_0	4.82882 pu

H - Line Segment

R_1	0.03597 pu
X_1	0.08612 pu
R_0	0.12445 pu
X_0	0.30180 pu

I - Recloser TOC Curves

Phase Pick-up	300 A
Phase Time Dial	2
Phase Curve	U.S. Very Inverse
Ground Pick-up	150 A
Ground Time Dial	7
Ground Curve	U.S. Very Inverse

System Parameters

J - Inverter Step-up Fuse

Speed Class	T
Designation	40T

K - Ground Transformer

* 5 parallel transformers

Zig-Zag

MVA	1
Base kV	13.8
R0	0.03 pu
X0	0.6 pu

L - Inverter Step-up (ISU) Transformer

* 5 parallel transformers

13.8 kV – 480 V

Yd1

MVA	1
Z_1	6%
Z_0	6%

M - Lump PV Source and Inverter

***** 5 parallel sources

Voltage	480 V
MVA	1
R_1	0.0 pu
X_1	0.217 pu (Subtransient)
R_2	Infinite
X_2	Infinite
R_0	Infinite
X_0	Infinite
Current Limit	1.2 pu

Acknowledgments

- Phillip Richardson
- Venugopal Rao Tondupally
- Max Desruisseaux
- Kshitij Maurya
- Tyler Porter
- Andrew Volk
- Trevor Hauck
- Pratap Mysore
- Paul Nyombi

Contact Information

Scott Elling, P.E. (MN)
scott.elling@hdrinc.com
763.591.6637
hdrinc.com/follow-us