Great Northern Transmission Line: Behind the (Electrical) Design

November 8, 2017

Christian Winter, P.E. – Minnesota Power

Sivasis Panigrahi, P.E. – POWER Engineers, Inc.

What is the Great Northern Transmission Line?

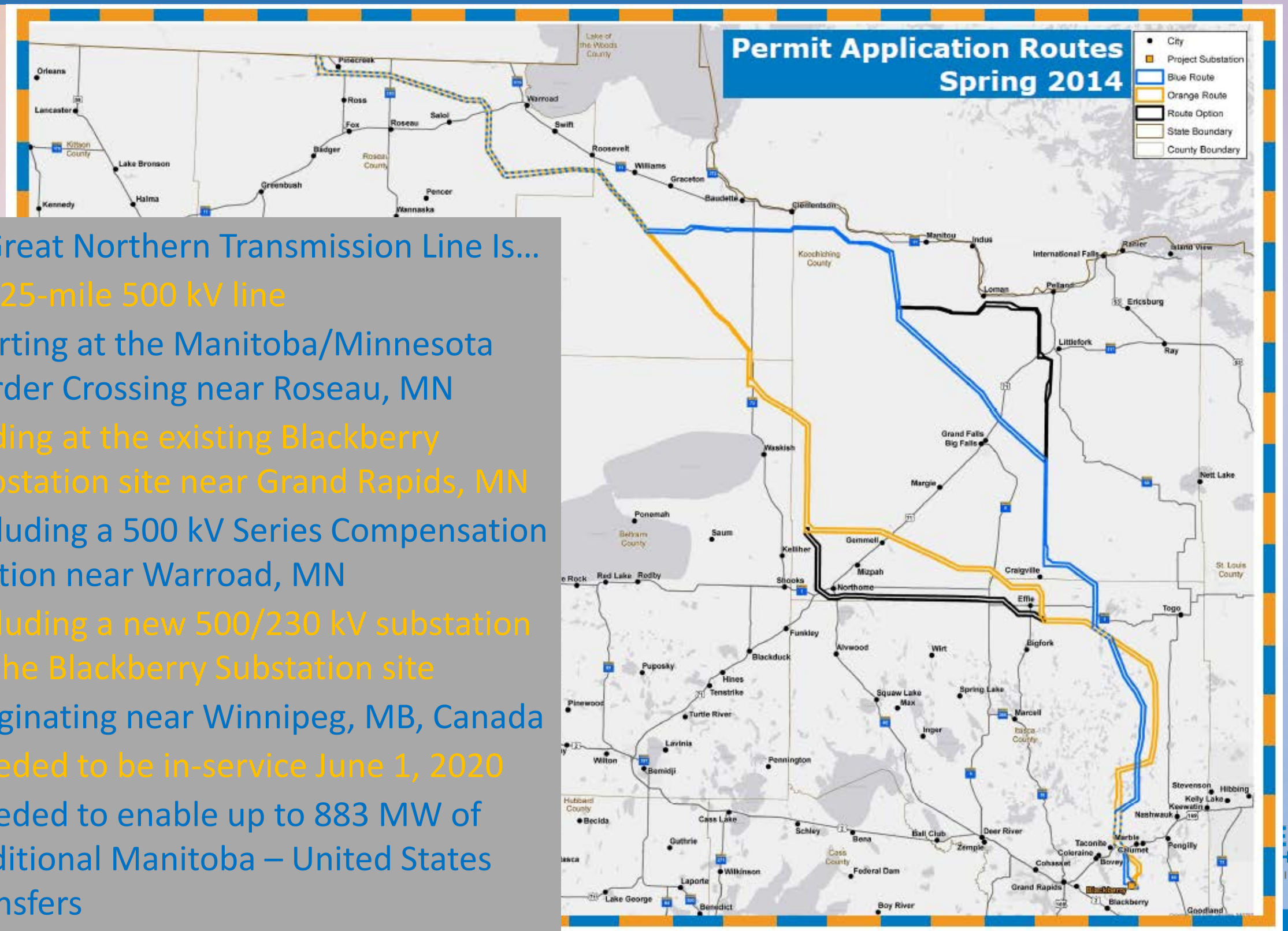

The Great Northern Transmission Line Is…

- A 225-mile 500 kV line
- Starting at the Manitoba/Minnesota Border Crossing near Roseau, MN
- Ending at the existing Blackberry Substation site near Grand Rapids, MN
- Including a 500 kV Series Compensation Station near Warroad, MN
- Including a new 500/230 kV substation at the Blackberry Substation site
- Originating near Winnipeg, MB, Canada
- Needed to be in-service June 1, 2020
- Needed to enable up to 883 MW of additional Manitoba – United States transfers

Great Northern Transmission Line Final Route

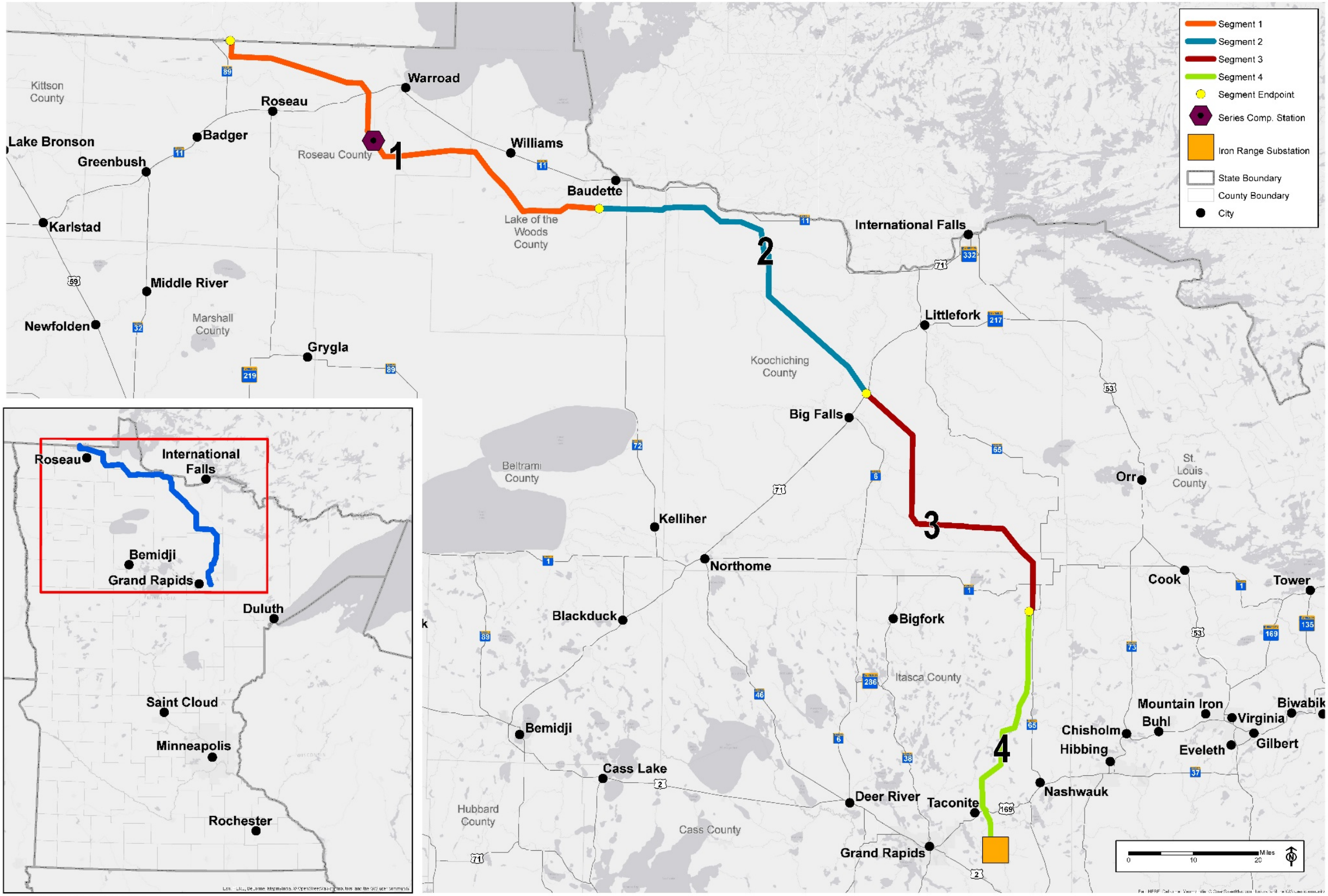

GNTL Project Timeline

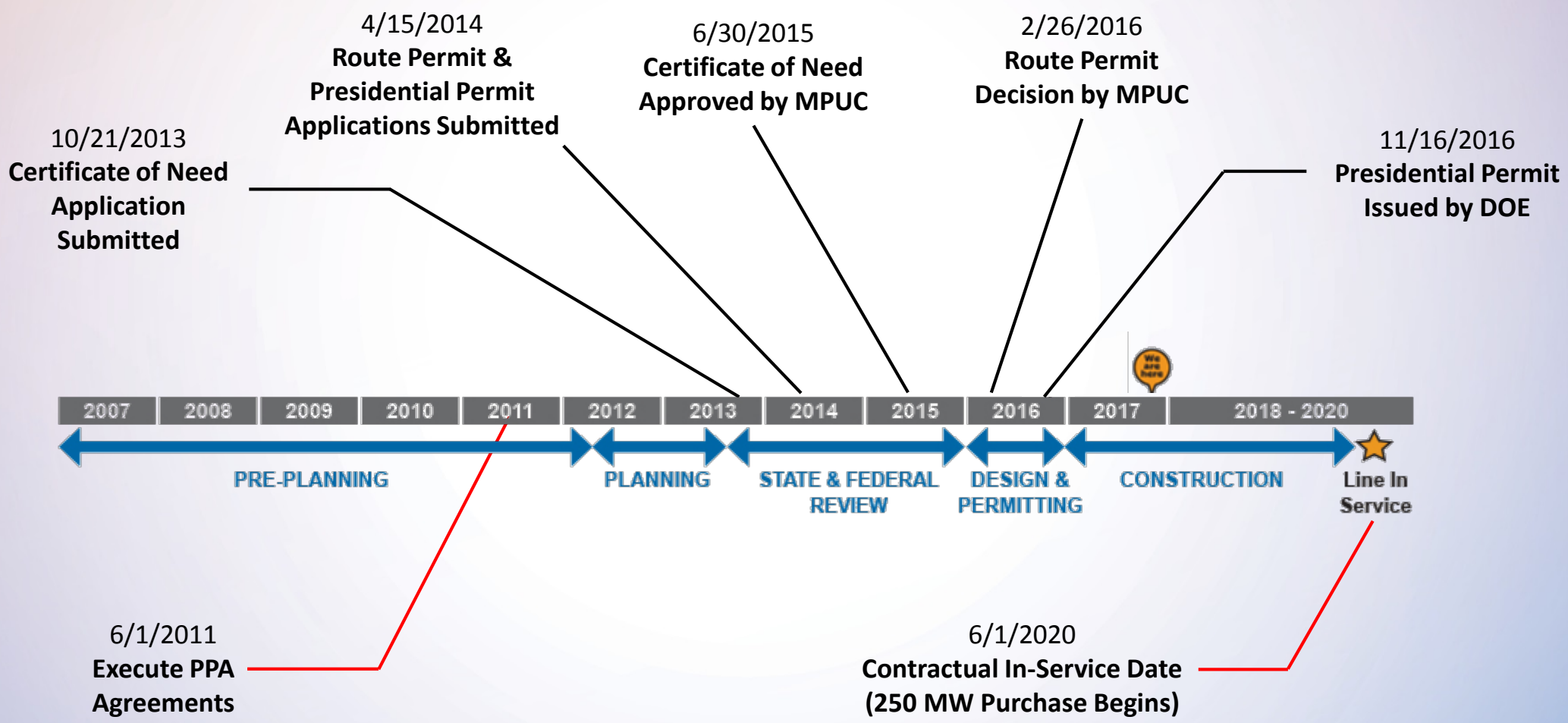

minnesota power
AN ALLETE COMPANY

GREAT NORTHERN TRANSMISSION LINE

Electrical Design Studies

Transmission Line Electrical Studies

OPGW & Shield Wire

Insulation Coordination
- Energization
- Fault Clearing
- Lightning

Hardware Corona

Steady State Imbalance

Parallel Resonance

Induced Voltage

Communications Interference

Pipeline AC Interference

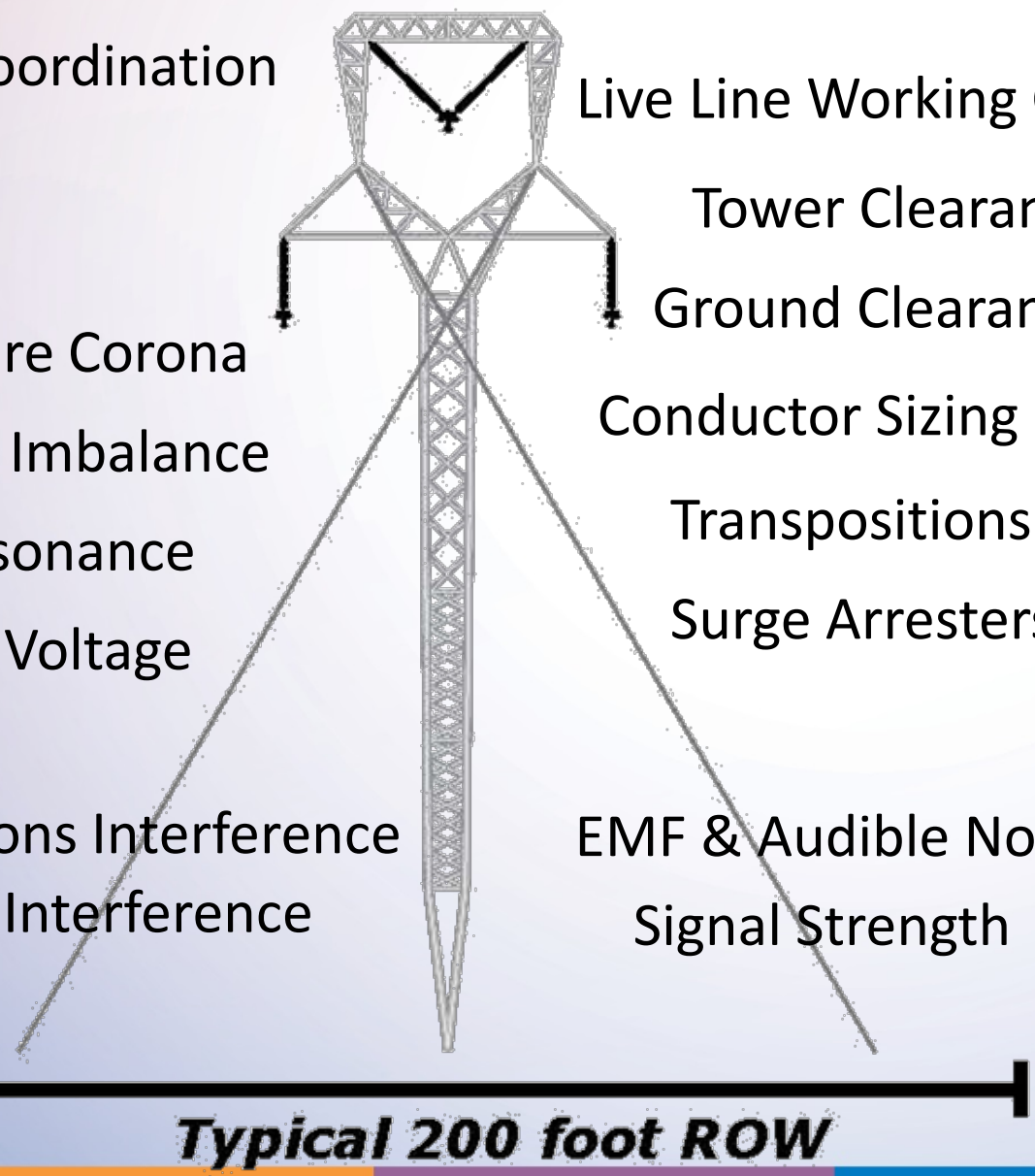

Live Line Working Clearances

Tower Clearances

Ground Clearances

Conductor Sizing

Transpositions

Surge Arresters

EMF & Audible Noise

Signal Strength

Substation Electrical Studies

Neutral Reactor Sizing

Transient Recovery Voltage

Insulation Coordination

Substation Clearances

Short Circuit Capability

Transformer Inrush

Ferroresonance

Series Capacitor Studies

Size (Percent Compensation)

Preliminary MOV Rating

Protection System Operation

Sub-Synchronous Resonance

minnesota power
AN ALLETE COMPANY

GREAT NORTHERN TRANSMISSION LINE

Today's Presentation

Transmission Line Electrical Studies

OPGW & Shield Wire

Insulation Coordination
- Energization
- Fault Clearing
- Lightning

Hardware Corona

Steady State Imbalance

Parallel Resonance

Induced Voltage

Communications Interference

Pipeline AC Interference

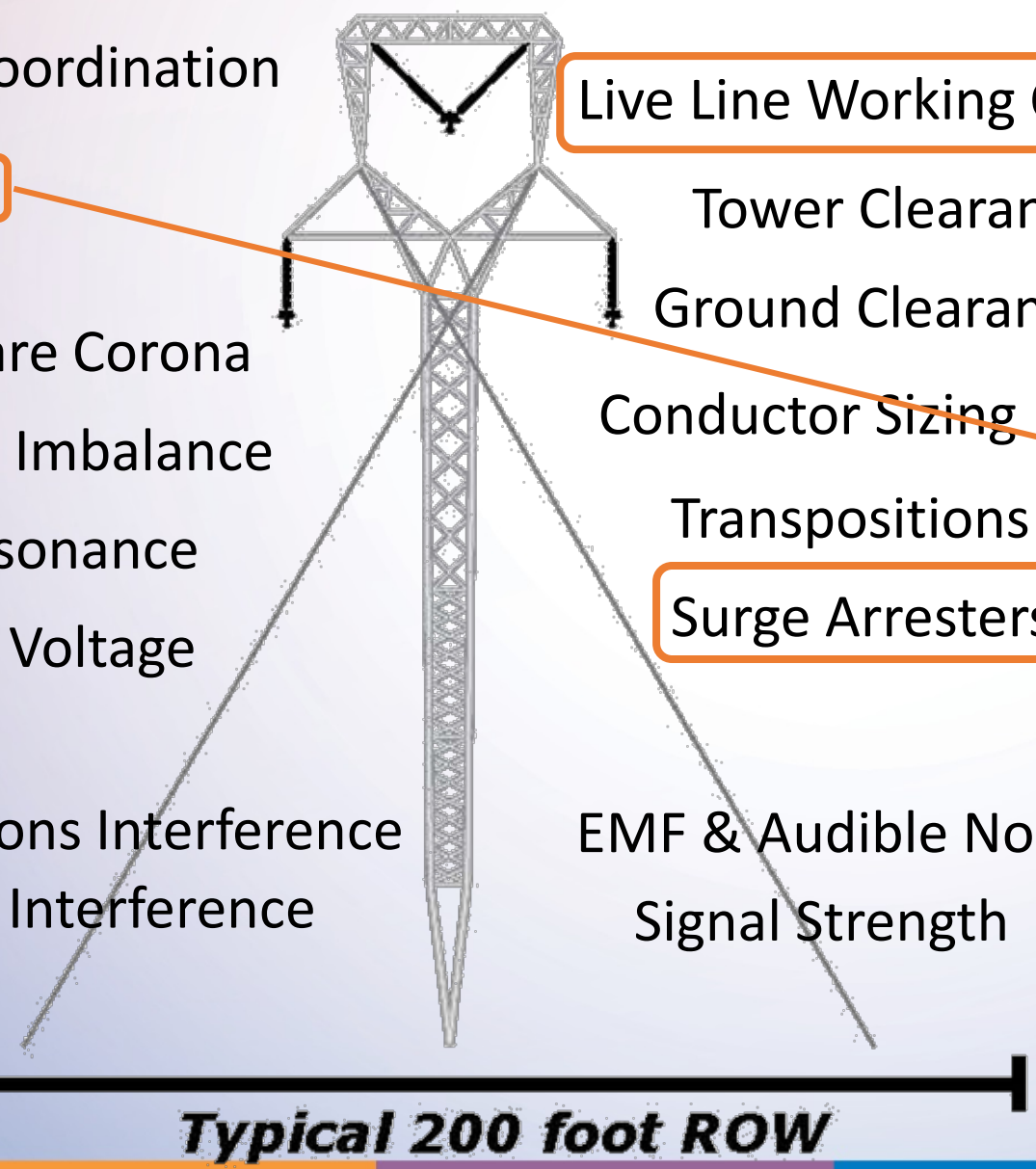

Live Line Working Clearances

Tower Clearances

Ground Clearances

Conductor Sizing

Transpositions

Surge Arresters

EMF & Audible Noise

Signal Strength

Issues Involved in Today's Presentation

Substation Electrical Studies

Neutral Reactor Sizing

Transient Recovery Voltage

Insulation Coordination

Substation Clearances

Short Circuit Capability

Transformer Inrush

Ferroresonance

Capacitor Studies

Size (Percent Compensation)

Preliminary MOV Rating

Protection System Operation

Sub-Synchronous Resonance

minnesota power
AN ALLETE COMPANY

GREAT NORTHERN TRANSMISSION LINE

Minimum Approach Distances

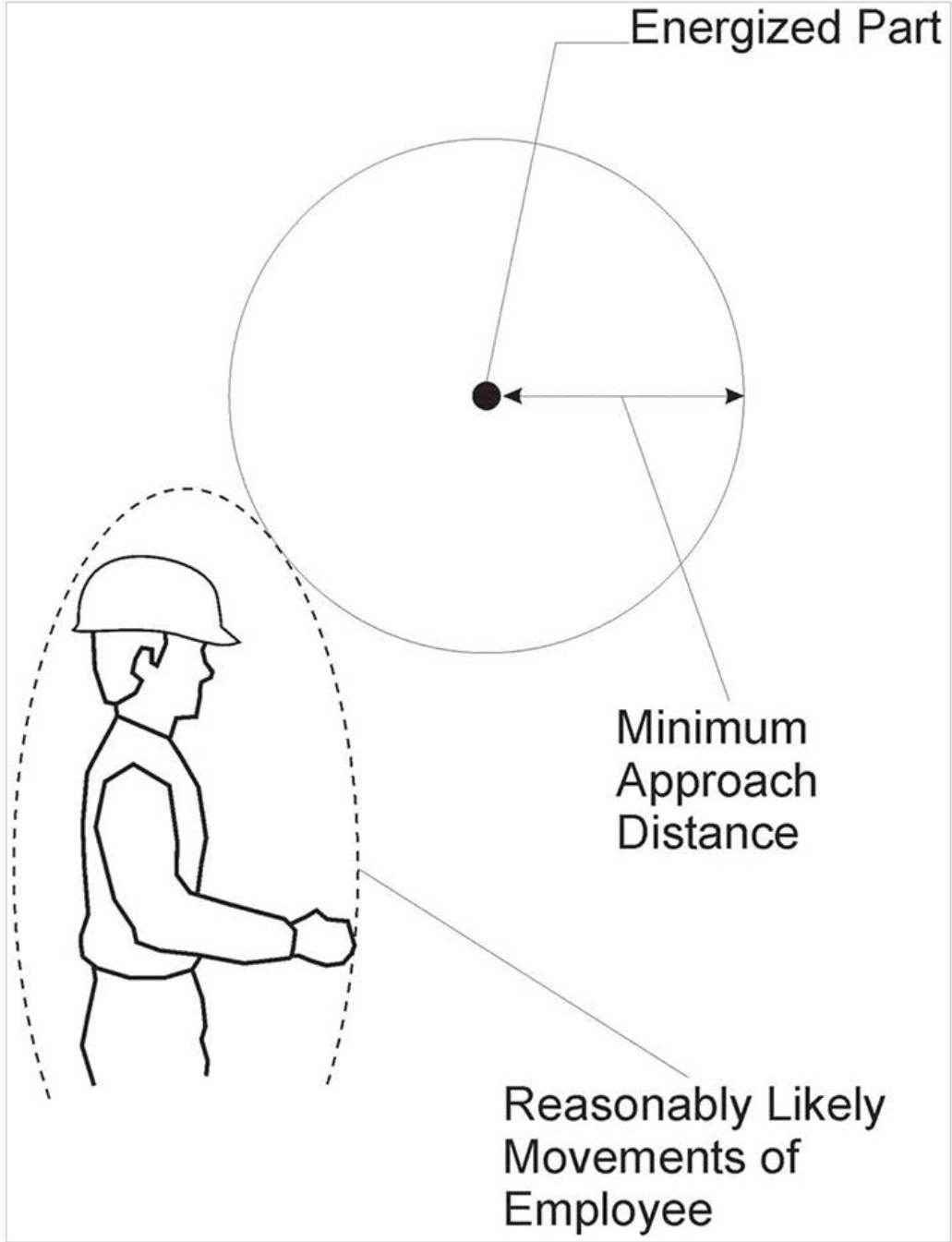

- Live line working clearances characterized as Minimum Approach Distances (MADs)
- Based on:
  - Maximum system operating voltage
  - "Maximum anticipated per-unit transient overvoltage, phase-to-ground" (Maximum TOV)
- OSHA provides default values but permits reduced MAD levels based on engineering analysis (29 CFR 1910.269)

minnesota power
AN ALLETE COMPANY
GREAT NORTHERN TRANSMISSION LINE

OSHA Default MAD Values

- OSHA Default MAD Values
  - Shown in Red →
  - Phase-to-Ground 16’ 8”
  - Phase-to-Phase 27’ 1”
- Default values preclude live-line maintenance for GNTL tower design
- Studies conducted to identify GNTL design considerations to limit Maximum TOV to facilitate safe live line working clearances
  - Shown in Yellow →

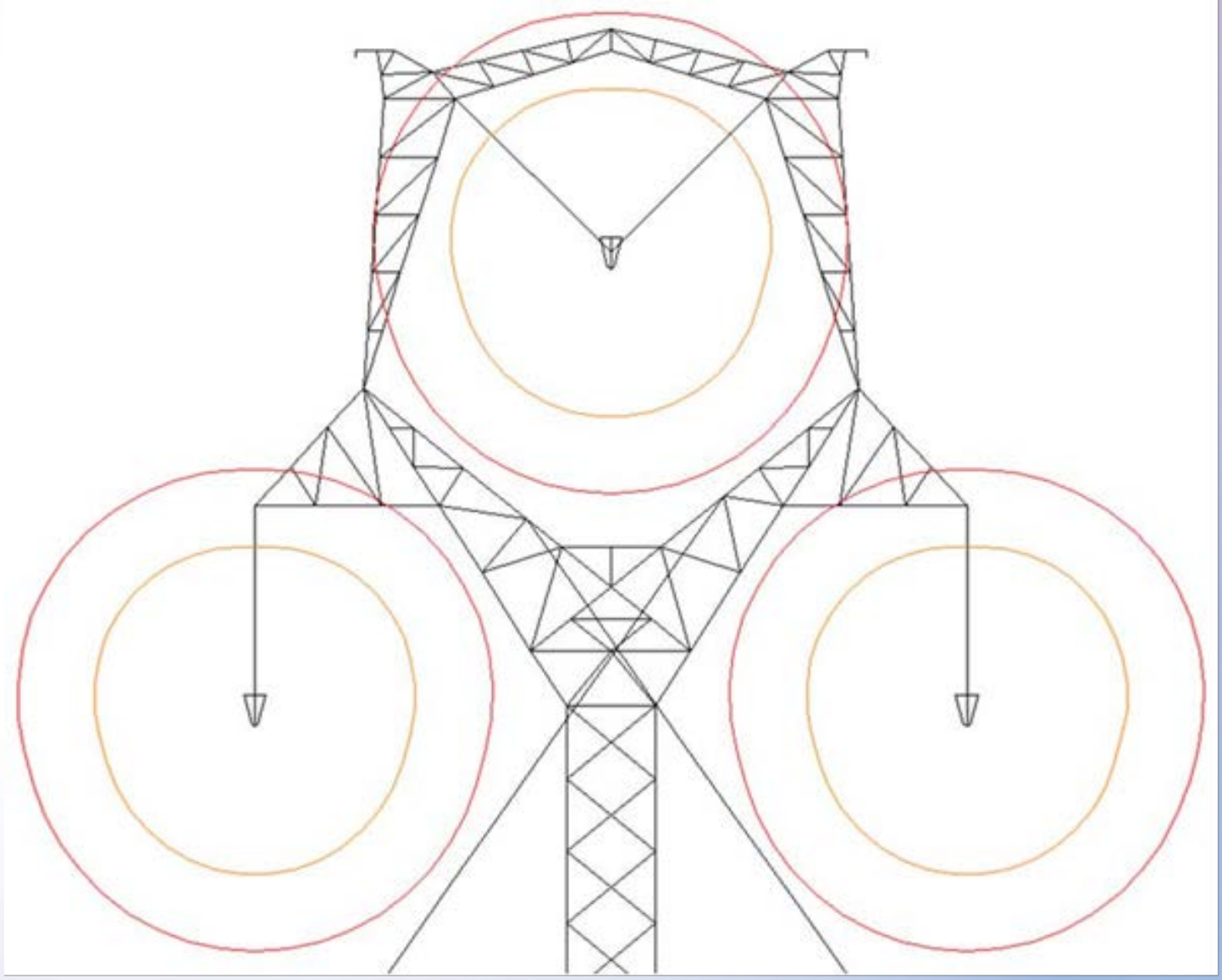

minnesota power
AN ALLETE COMPANY

GREAT NORTHERN TRANSMISSION LINE

Insulation Coordination - Definition

- Insulation Coordination (IEEE)
  - The selection of insulation strength consistent with expected overvoltages to obtain an acceptable risk of failure
  - The procedure for insulation coordination consists of
    - determination of the voltage stresses
    - selection of the insulation strength to achieve the desired probability of failure
  - The reduction of voltage stresses by application of surge-protective devices
  - Surge arresters are commonly applied and selection is based on MCOV rating (Maximum Continuous Operating Voltage)

Electrical Transients – Illustration

Origin: **Waveshape:**

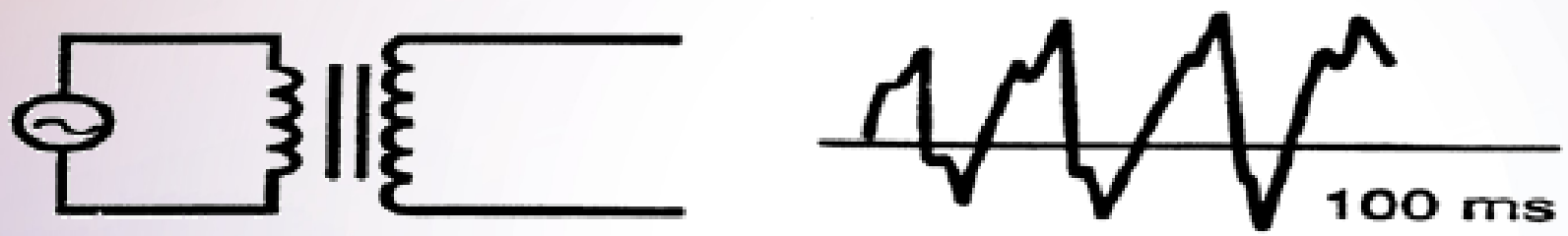

- **Temporary**

- **Switching**

- **Lightning**

minnesota power
AN ALLETE COMPANY

GREAT NORTHERN TRANSMISSION LINE

Different Events – Frequency Range

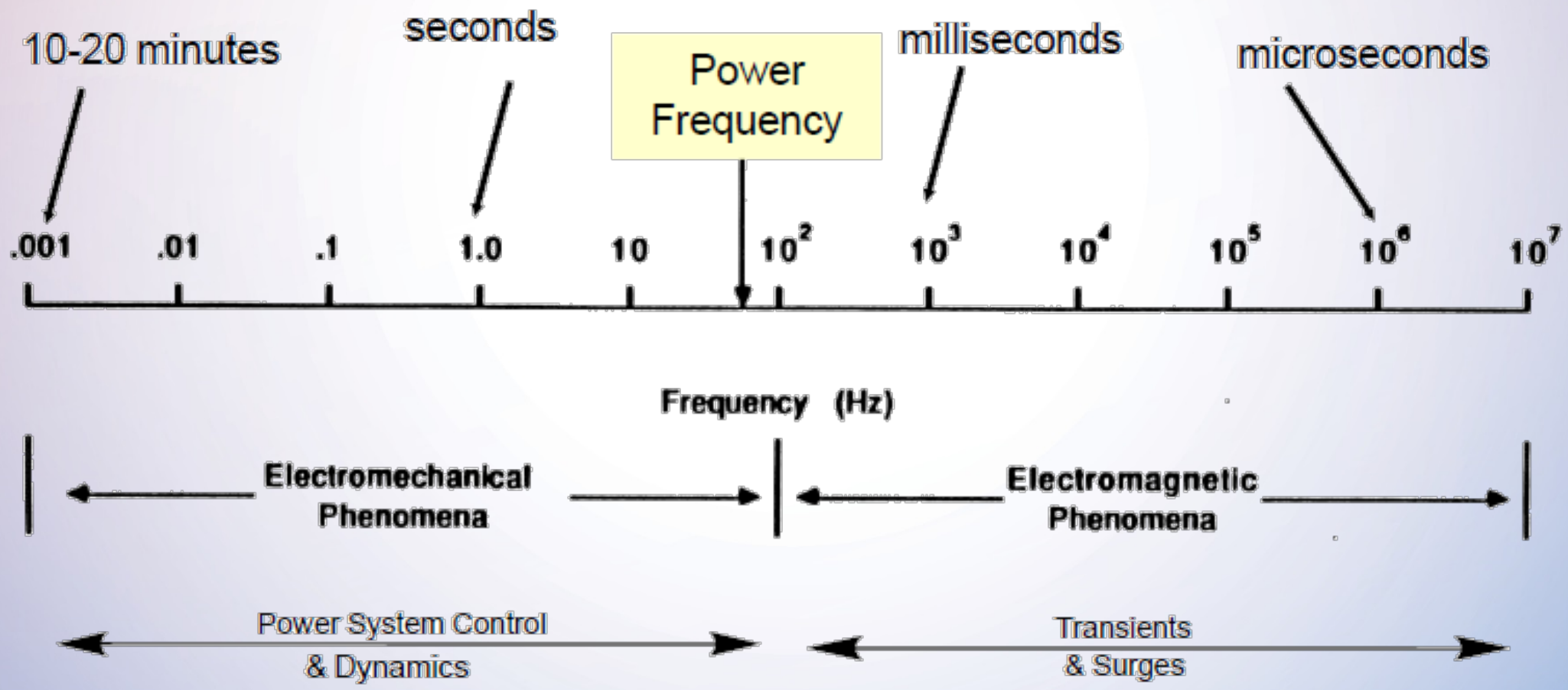

minnesota power
AN ALLETE COMPANY

GREAT NORTHERN TRANSMISSION LINE

Overvoltage - Units

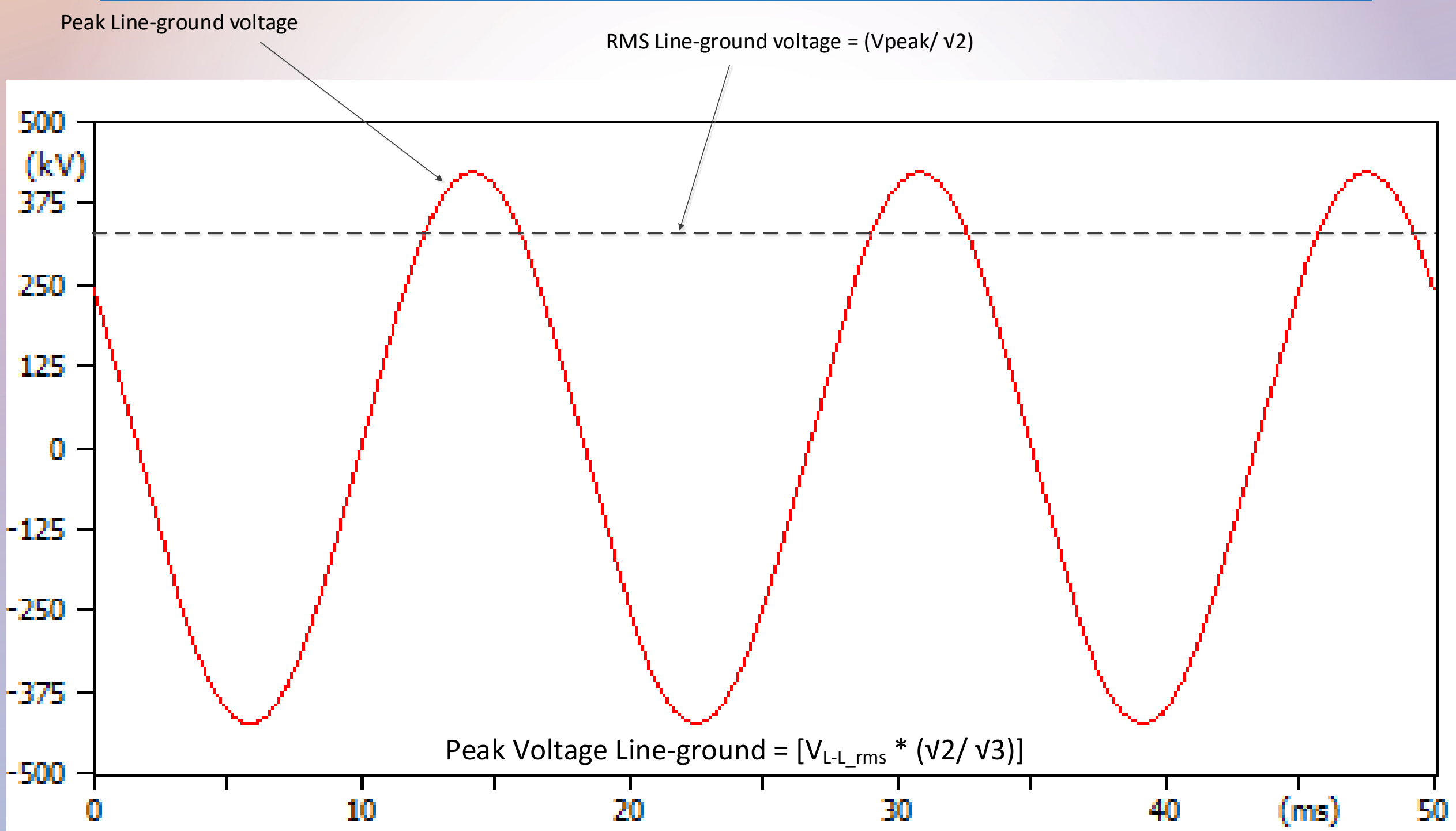

500 kV Transmission System

- System Layout

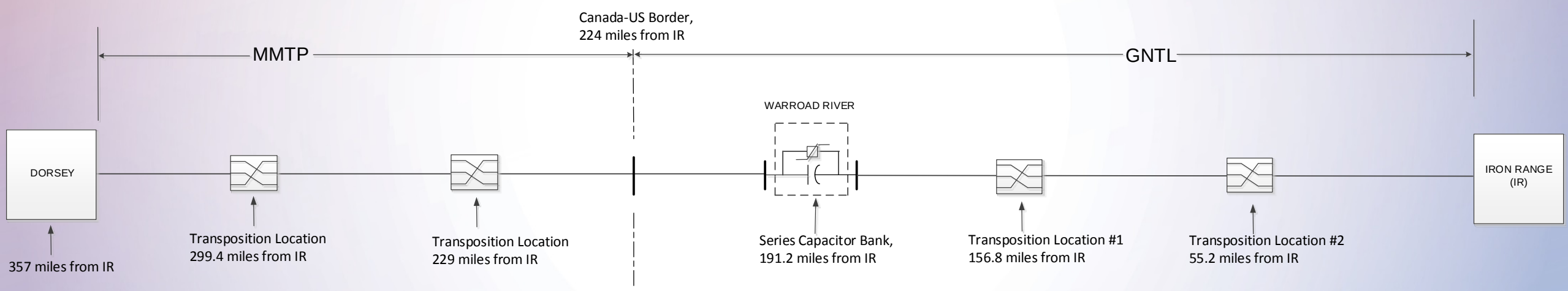

minnesota power
AN ALLETE COMPANY

GREAT NORTHERN
TRANSMISSION LINE

GNTL Project Design

- Line Design:
  - Guyed Delta for the structure design with 1192.5 ACSR “Bunting”
  - Three subconductor bundle for the entire line length
- Two transpositions on GNTL and two transpositions on MMTP (Manitoba side of 500 kV Line)
- 60% - Series compensated (Located at Warroad River Station, approximately 191 miles from Iron Range Substation)

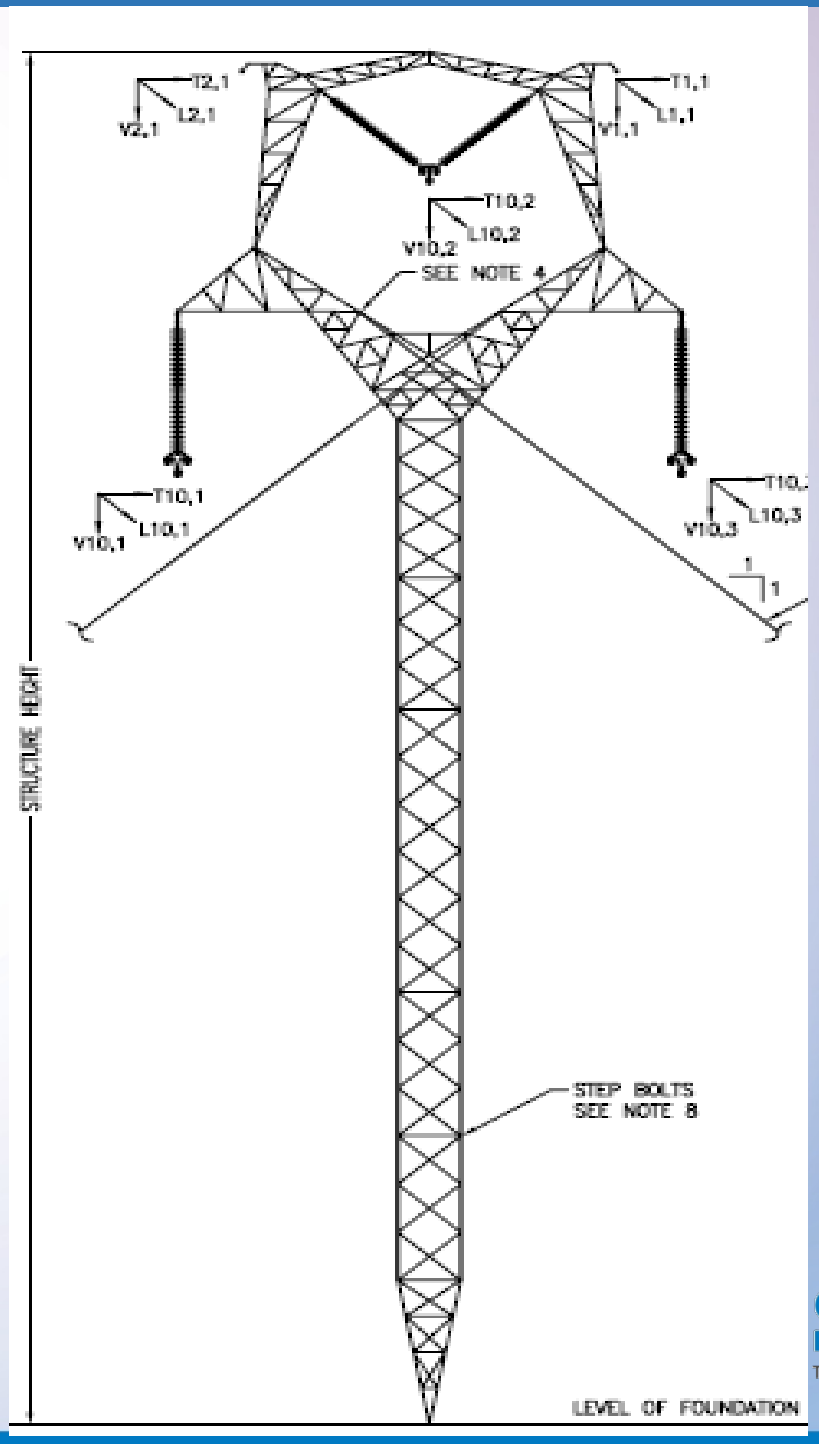

GREAT NORTHERN TRANSMISSION LINE

GNTL Structure Geometry

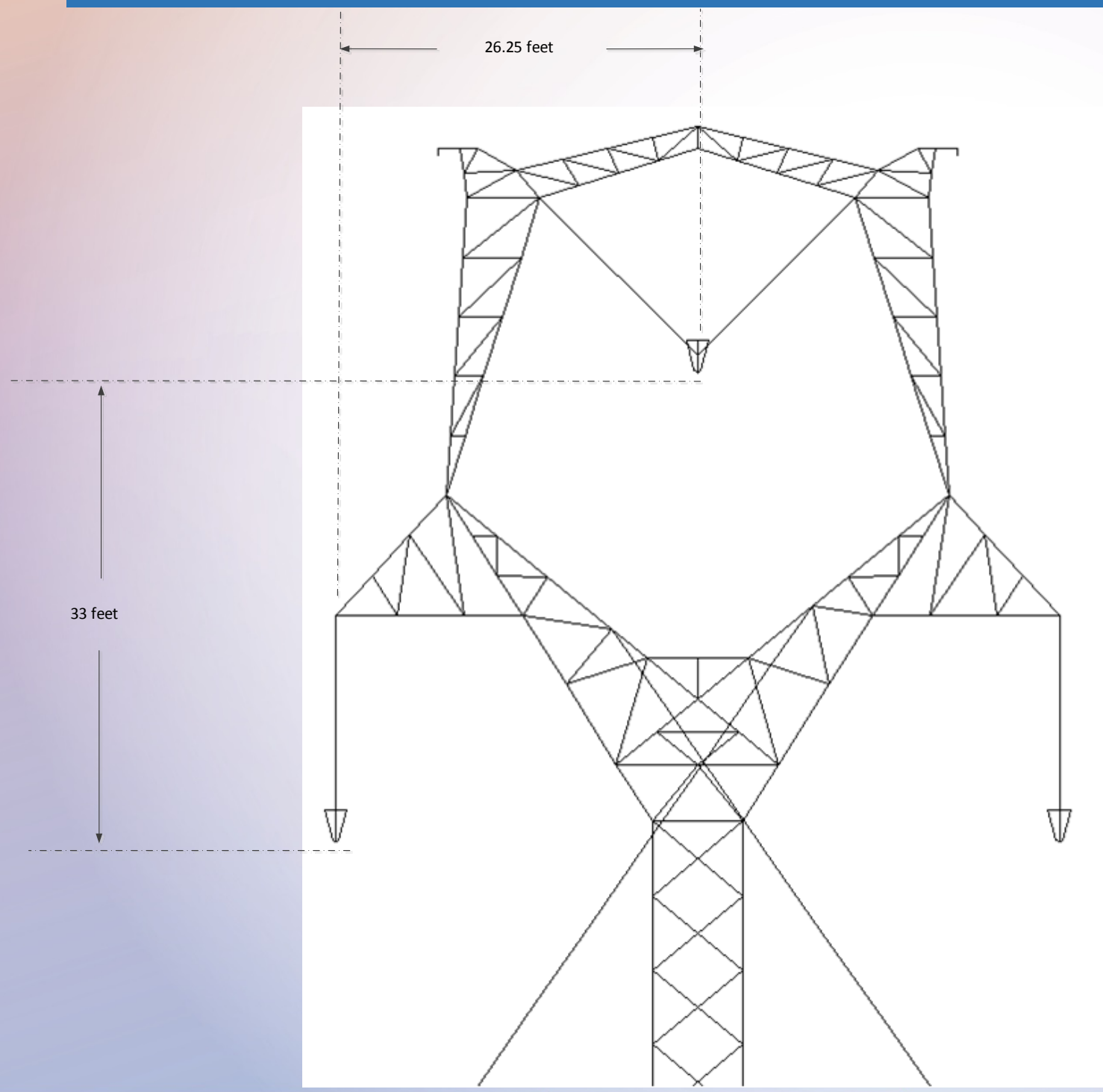

- Guyed Delta Structure Geometry

minnesota power
AN ALLETE COMPANY

GREAT NORTHERN TRANSMISSION LINE

Series Capacitors – Benefits

- FSC (Fixed Series Capacitors) or TCSC (Thyristor Controlled Series Capacitors) are available
- FSCs are more commonly used
- Improve voltage profile on a long transmission line
- Improve reactive power balance
- Power balancing on GNTL to facilitate transfer due to the existing parallel line (M602F)

Fixed Series Capacitor (FSC) Design

(1). Capacitor Bank

(2). Discharge Current Limiting & Damping Equipment – Reactor limits and damps the capacitor discharge current during a bypass operation

(3). Bypass Breaker -Bypass of capacitor and MOV

(4). MOV (Metal Oxide Varistor)- Limits the voltage stress across the capacitor immediately during a fault or excessive line current

(5). OCT (Optical Current Transducer) – Measures current. Can detect faults at low line currents

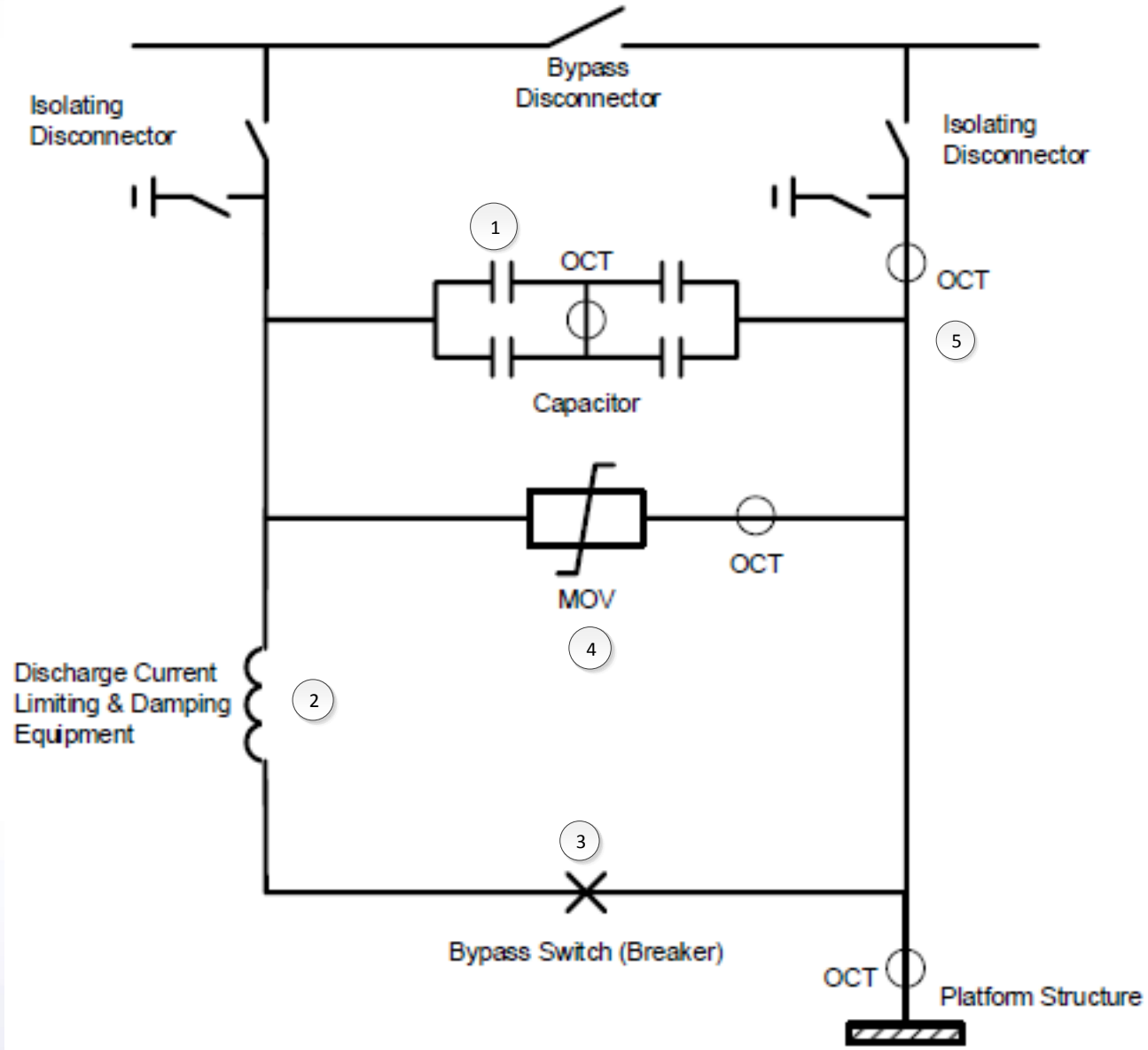

minnesota power
AN ALLETE COMPANY

GREAT NORTHERN TRANSMISSION LINE

Series Capacitor Platform Layout

minnesota power
AN ALLETE COMPANY

GREAT NORTHERN TRANSMISSION LINE

FSC Design with a Triggered Gap

1. Capacitor Bank

2. Discharge Current Limiting & Damping Equipment – Reactor limits and damps the capacitor discharge current during a bypass operation

3. Bypass Breaker -Bypass of capacitor and MOV

4. MOV (Metal Oxide Varistor)- Limits the voltage stress across the capacitor immediately during a fault or excessive line current

5. OCT (Optical Current Transducer) – Measures current. Can detect faults at low line currents

6. Fast Protective Device – Triggered Air Gap or CapThor [ABB]

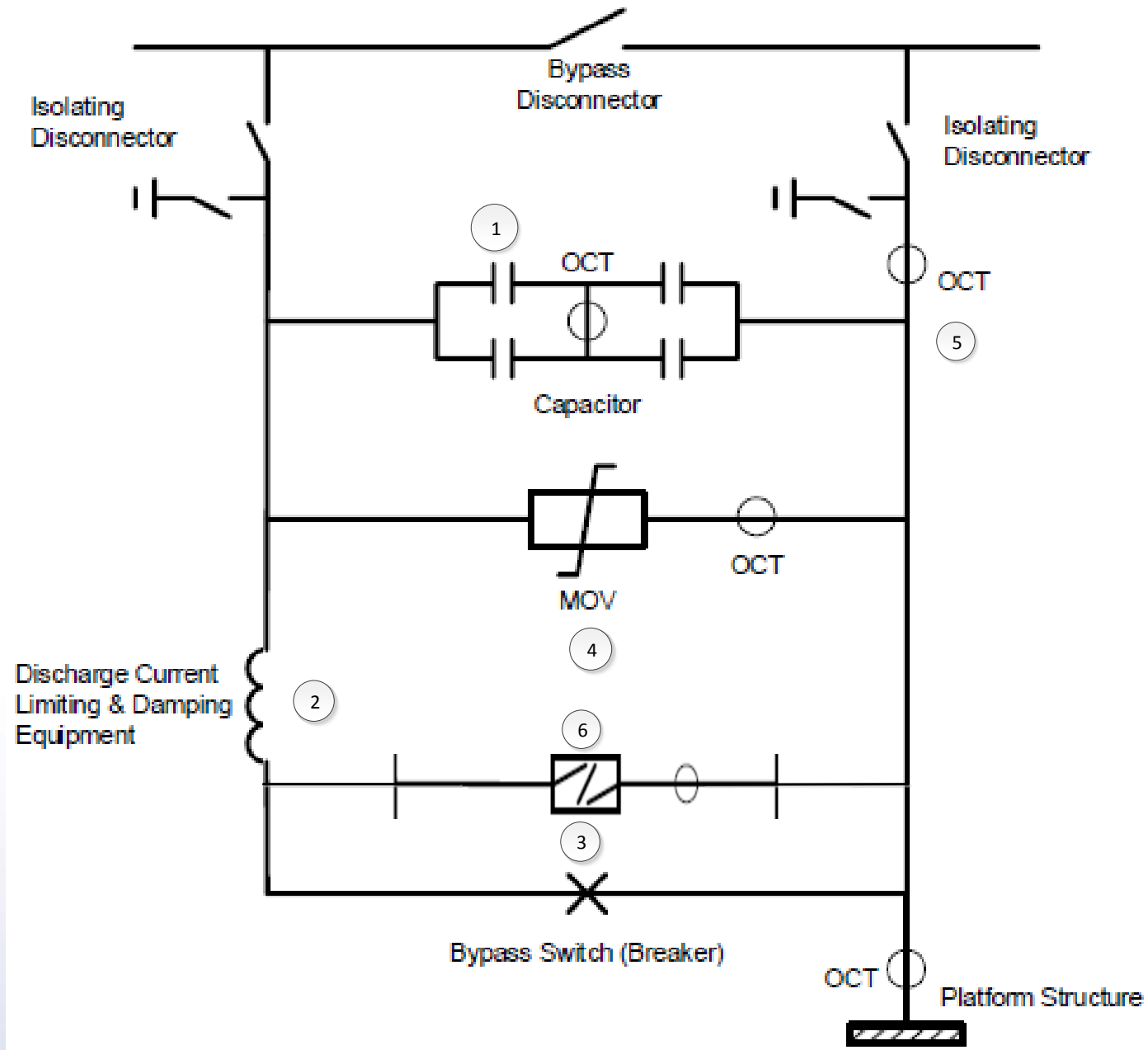

Electrical Transients – Substation

- System events that can generate electrical transients and affect equipment selection
  - Energizing or de-energizing shunt capacitor Banks and shunt reactor banks
  - Inrush transients, outrush transients and transient recovery voltages are of concern
- Transient Recovery Voltage (TRV) is important
- The voltage appears across breaker terminals after current interruption. This is called recovery voltage
- Breaker capability must exceed the recovery voltage for a successful breaking operation
- A common approach is to apply a higher voltage class breaker to meet TRV requirement

Electrical Transients – TRV

- System TRV and Breaker Capability Plot
  - Fault interruption is successful only when the system recovery voltage is under the breaker TRV capability envelope

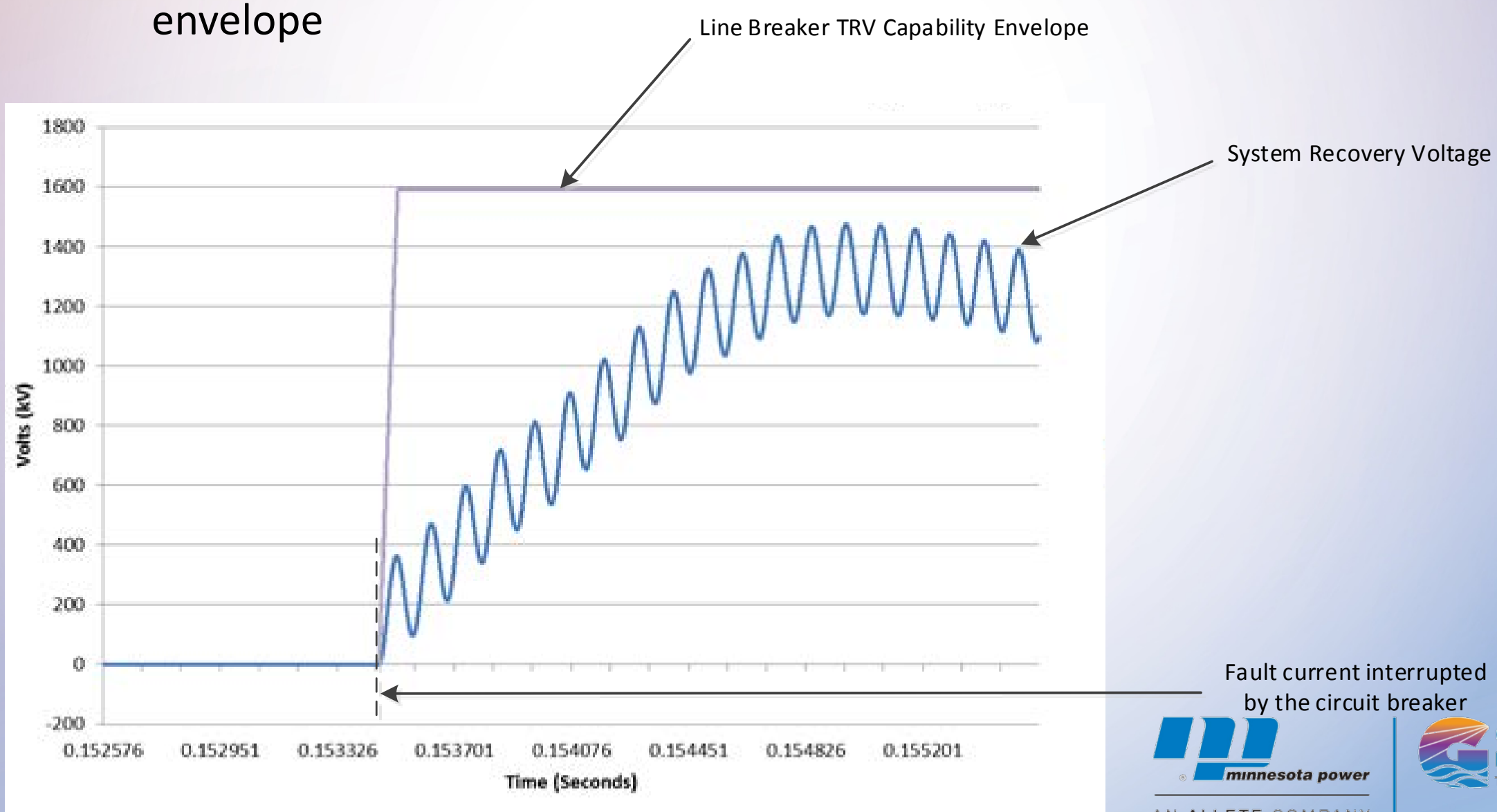

minnesota power
AN ALLETE COMPANY
GREAT NORTHERN TRANSMISSION LINE

Electrical Transients – Line

- Variety of system events can generate electrical transients on a transmission line
  - Lightning strike
  - Line energization
  - Clearing of faults on adjacent lines (external faults)
  - Internal fault clearing
  - Reclosing operations after fault clearing (internal faults)
- In this instance line circuit breakers operate to clear the fault(s)
- Line Insulation Strength – Meet or exceed the stress
- Insulation coordination study is usually performed on all EHV systems
- Live-Line Maintenance – A major requirement

Transient Studies – Determine TOV

- Identify what event can generate the highest transient overvoltage
- Perform Analysis:
    - Line Energization (No live-line work will be performed during this event)
    - External Faults (Adjacent to Dorsey or Iron Range Stations)
    - Internal Faults (Faults on the line between Dorsey and Iron Range which are cleared by the line breakers)
- All fault types considered
- Simulated fault types along the line and monitored transients along the line
- Results indicated that internal fault clearing resulted in highest transient overvoltages

minnesota power
AN ALLETE COMPANY
GREAT NORTHERN TRANSMISSION LINE

Transients – Initial Study Setup

- Started by modeling line arresters on or near the transposition structures for a total three locations on GNTL
- All line arresters are rated 353 kV MCOV
- Locations selected in consultation with line design team to ensure all weather accessible location.
- Self-Supporting Structures only for line arrester installations
- Highest transient observed was 2.7 per unit
- GNTL tower design criteria for Live-Line maintenance is 2.5 per unit (2.3 per unit + safety margin of 0.2 per unit)

minnesota power
AN ALLETE COMPANY
GREAT NORTHERN TRANSMISSION LINE

Transients – Maximum TOV Plot

- Voltage Plot Showing Maximum Overvoltage

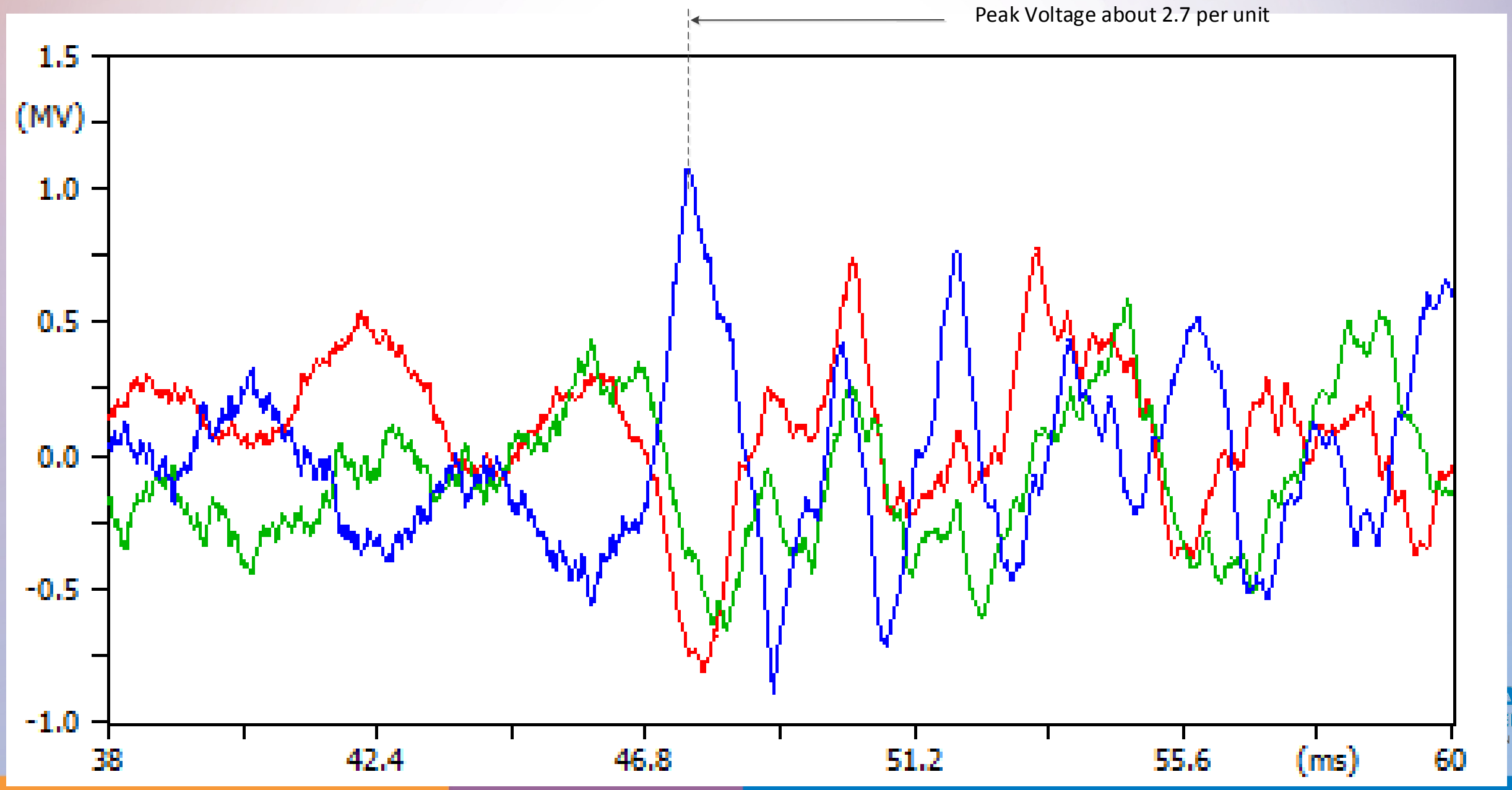

Transients – Plot

- Voltage Plot Showing FSC discharge circuit without mitigations

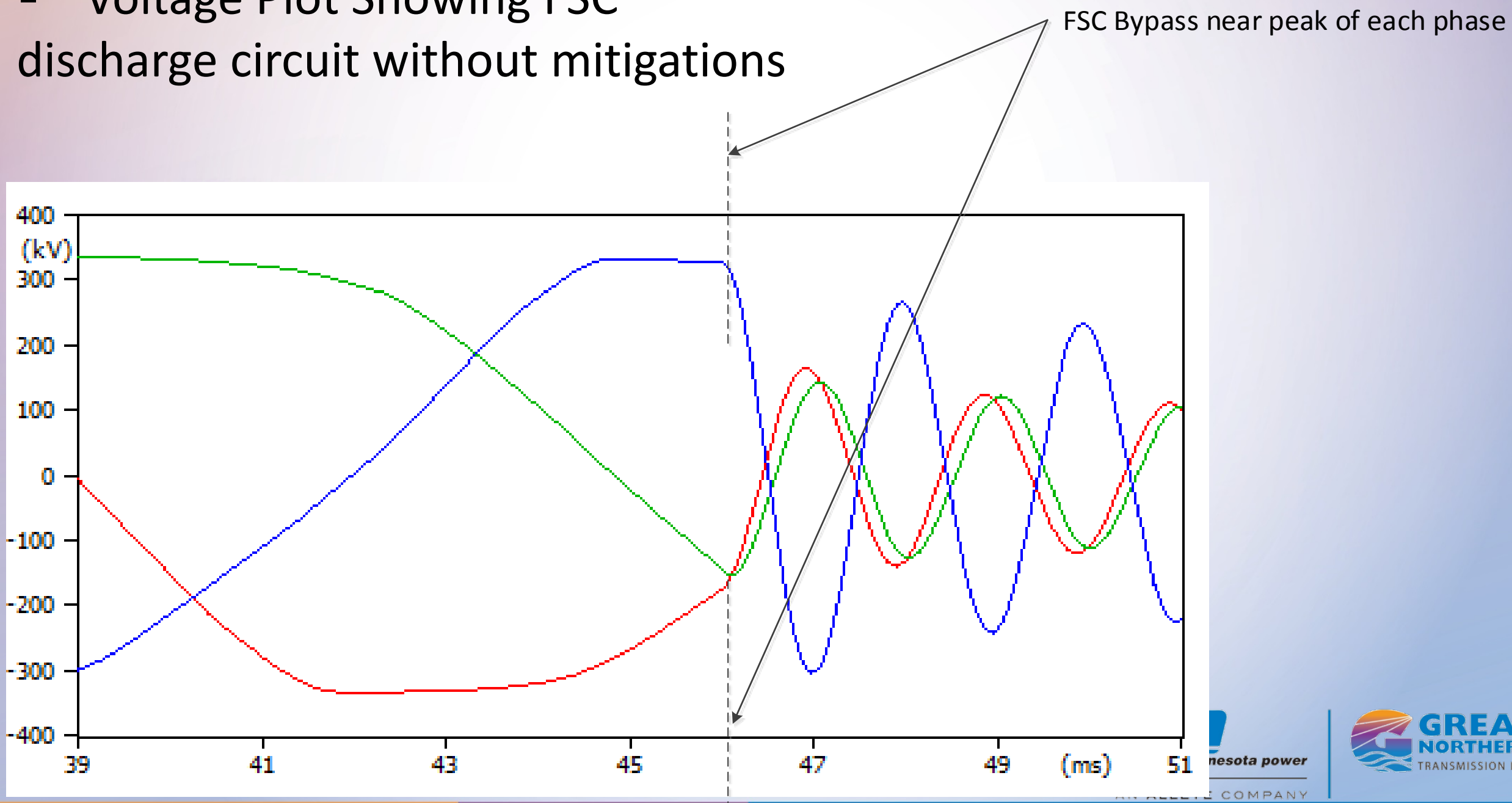

Bypass Circuit – Observations

- Switching transients are sensitive to bypass time
- Bypassing near peak voltages (2 out of 3 phases) of the series capacitor results in higher transient overvoltages
- Bypassing near zero voltages (2 out of 3 phases) of the series capacitor results in lower transient overvoltages

Bypass Circuit - Effect of timing

- Plot Showing FSC discharge circuit bypassed near peak on one phase and near zero on the other two phases

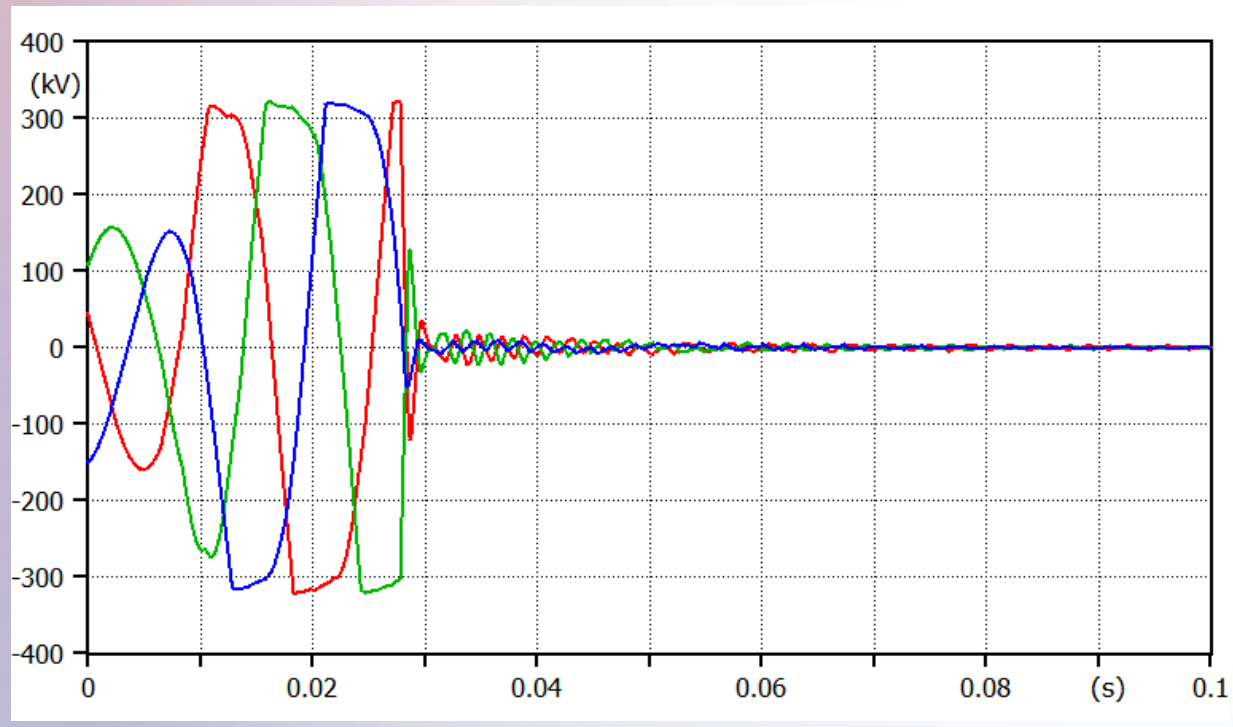

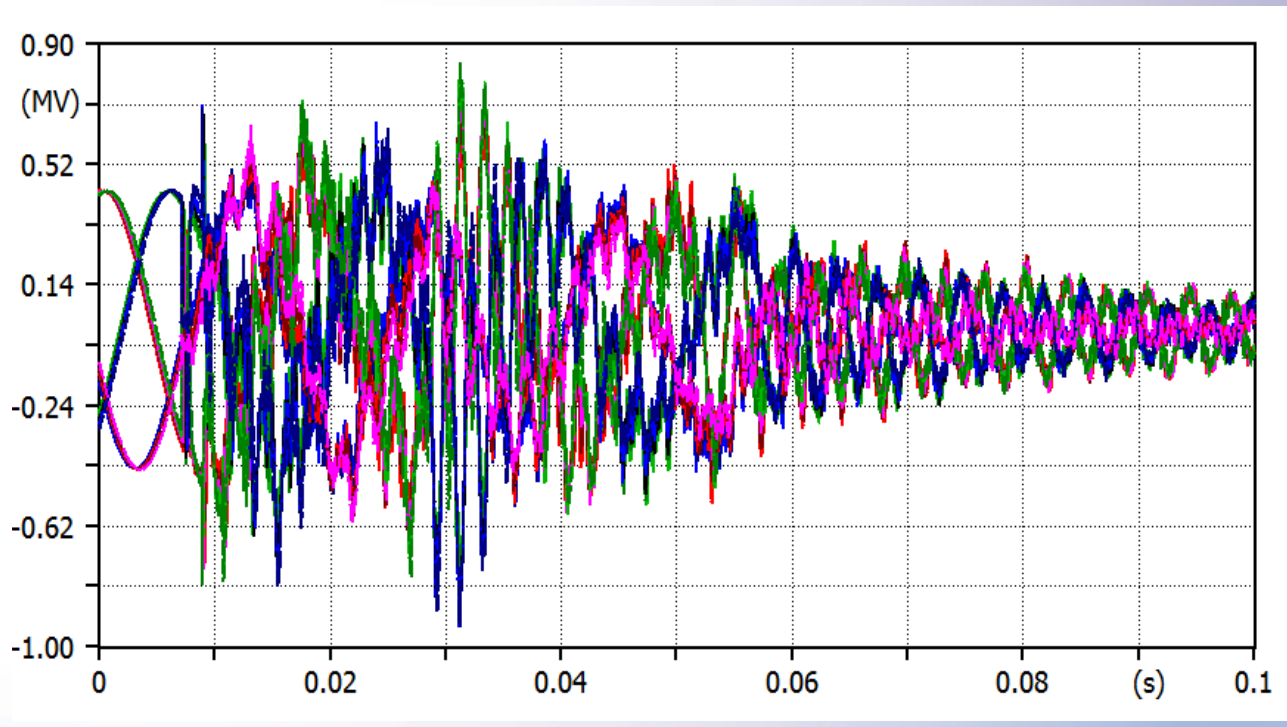

minnesota power
AN ALLETE COMPANY
GREAT NORTHERN TRANSMISSION LINE

Bypass Circuit – Observations

- Line Breaker TRV capability stressed if bypass time and fault clearing time are close
- For example, a 2 cycle breaker clearing a Zone 1 fault interrupts in about 2.5 to 3 cycles while FSC bypass breaker closes in about the same time
- This can be mitigated by either with a triggered gap or by delaying the bypass time (about 75 milliseconds or 4.5 cycles).
- A secondary benefit is that these mitigations also reduce the switching transient levels!

Transient Studies – Mitigation Options

- Redesign GNTL towers to accommodate the higher clearances required (Not a feasible option!)
- Bypass the series capacitor bank (Least preferred option)
  - Results in reduced power transfer capability
- Primary focus was therefore to:
  - Add more line arresters on GNTL to limit switching transients
  - Allow the FSC vendor to optimally design the series capacitor and meet the system requirements
  - Meet the TRV requirements of the line circuit breakers
- Consulted with the FSC vendors that mitigation options were feasible (and realistic)
- Confirmed that proposed mitigations have been used in many other FSC applications

Transmission Line Surge Arresters

- Transmission Line Arresters
- Five GNTL locations selected in consultation with design team
- Design challenges with implementing arresters on Guyed Delta
- Self Supporting structures for transmission line arresters

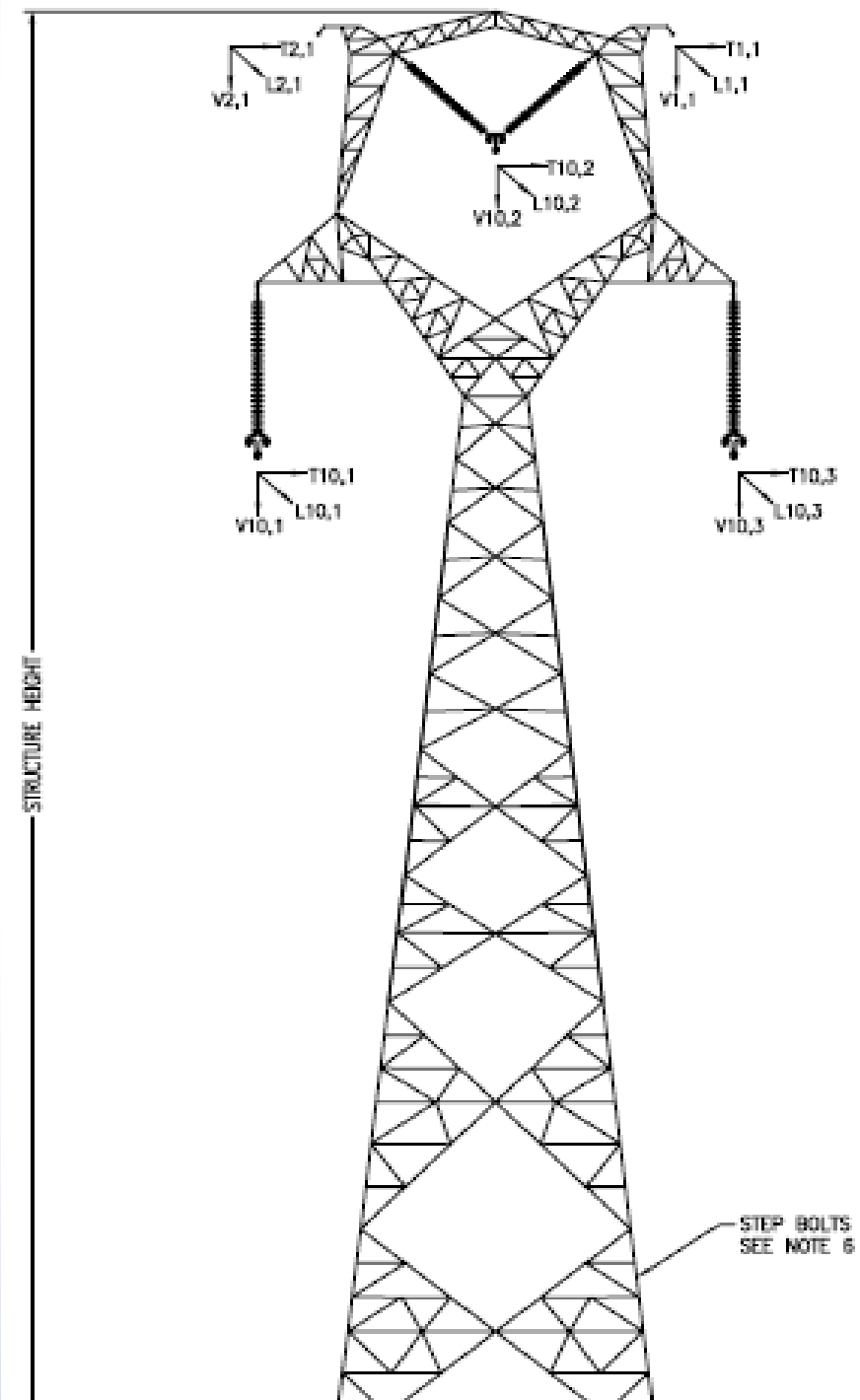

GREAT NORTHERN TRANSMISSION LINE

Line Surge Arrester Locations

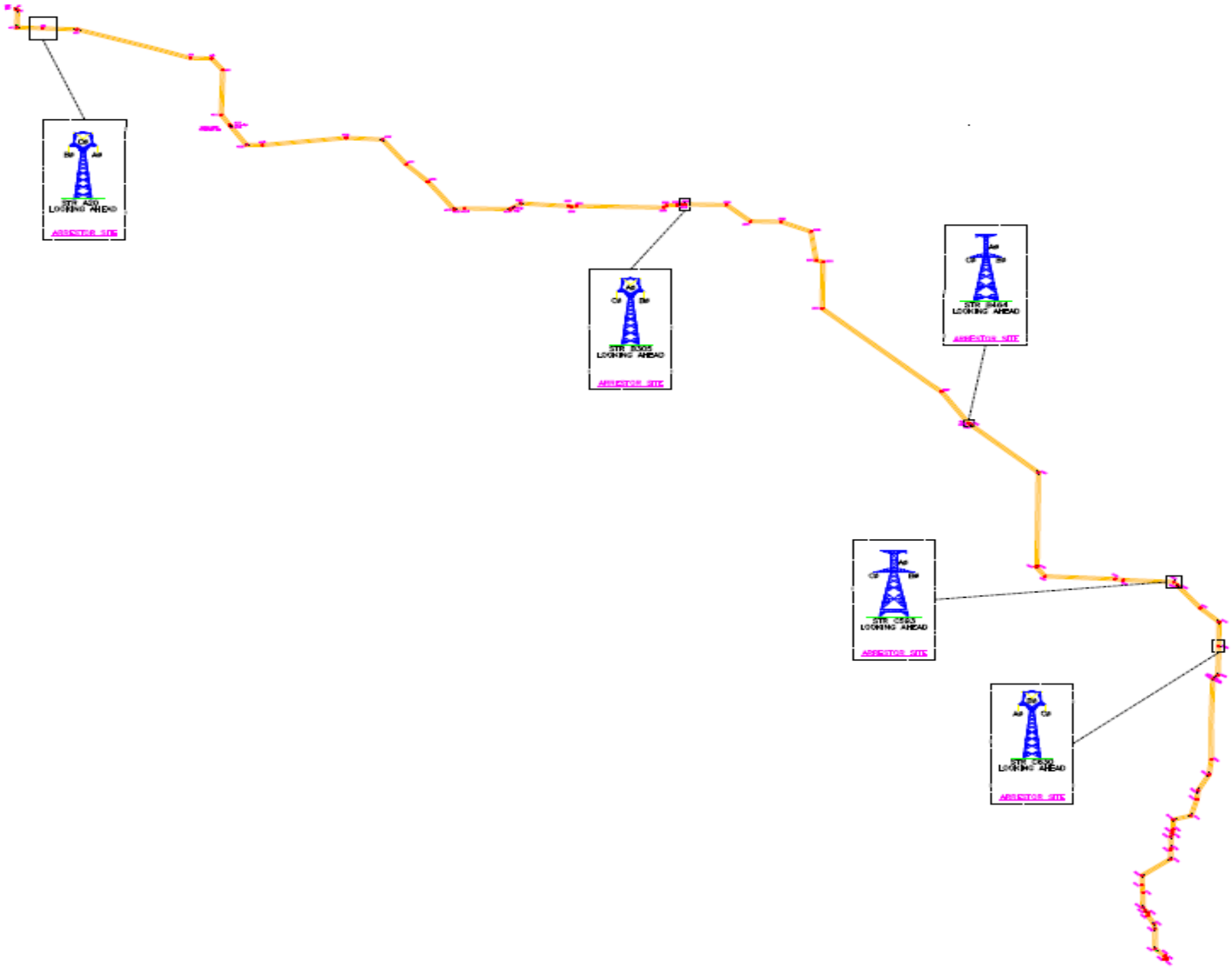

GREAT NORTHERN TRANSMISSION LINE

Line Surge Arrester Installation

minnesota power
ETE COMPANY

GREAT NORTHERN TRANSMISSION LINE

Line Surge Arresters – Close Up

FSC With Triggered Air Gap – Option 1

- Fixed series capacitor design – with triggered gap and damping resistor

(7). Damping resistor further reduces the time constant and the discharge frequency

- In parallel with the discharge reactor
- The spark gap (or an MOV) in series with the resistor avoids a steady state drain
- This eliminates rating the resistor for steady state conditions

- A range is between 5 ohms and 15 ohms

- Optimized by manufacturers during FSC design

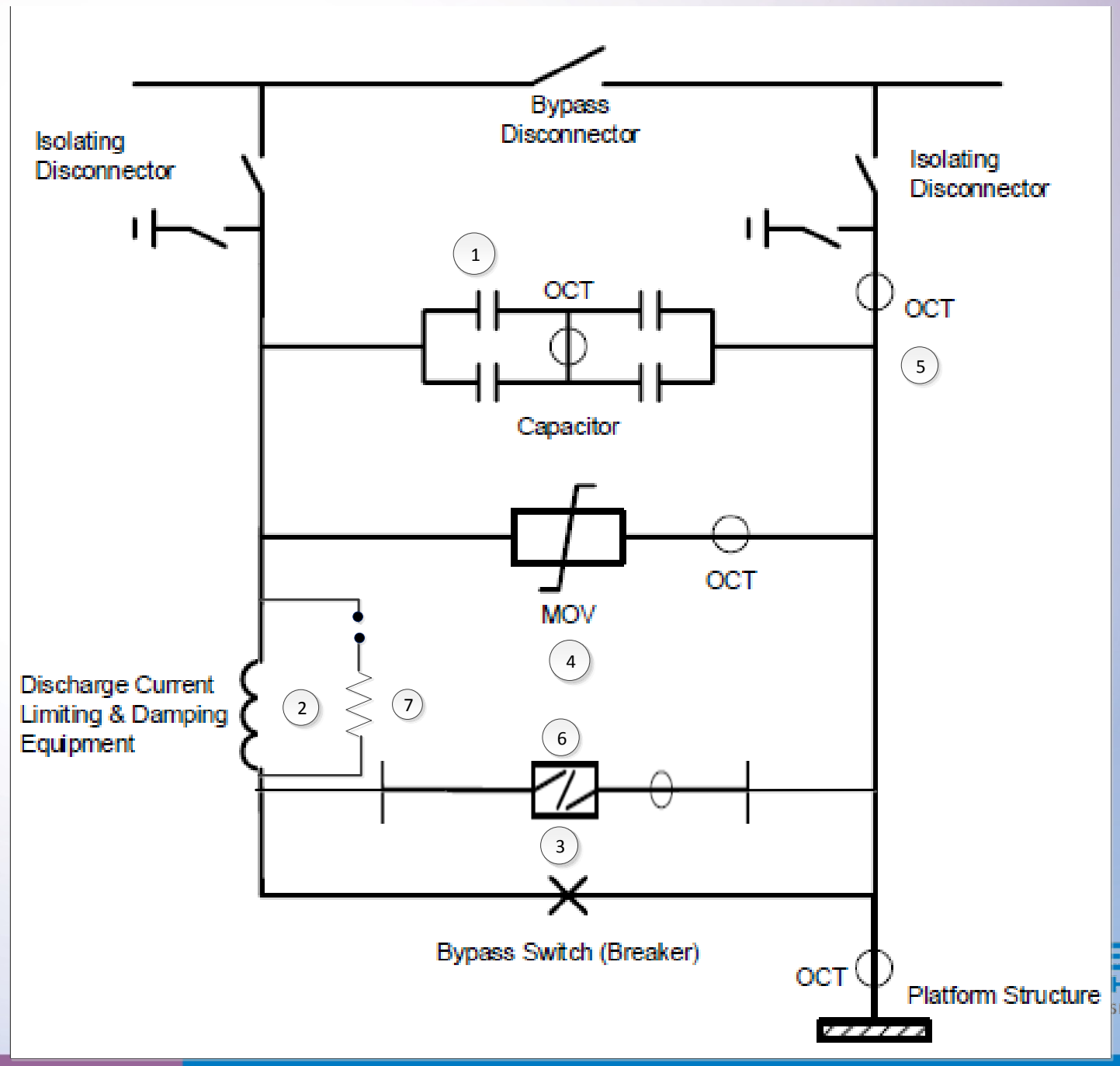

FSC With Gapless Design– Option 2

- Fixed series capacitor design – Gapless and damping resistor
  - Bypass circuit unchanged with a damping resistor
  - Line breakers clear fault in about 33 to 40 milliseconds
  - The bypass time is delayed
  - This will allow the MOV to conduct and absorb the energy from the transients
  - MOV selection optimized by manufacturers during FSC design

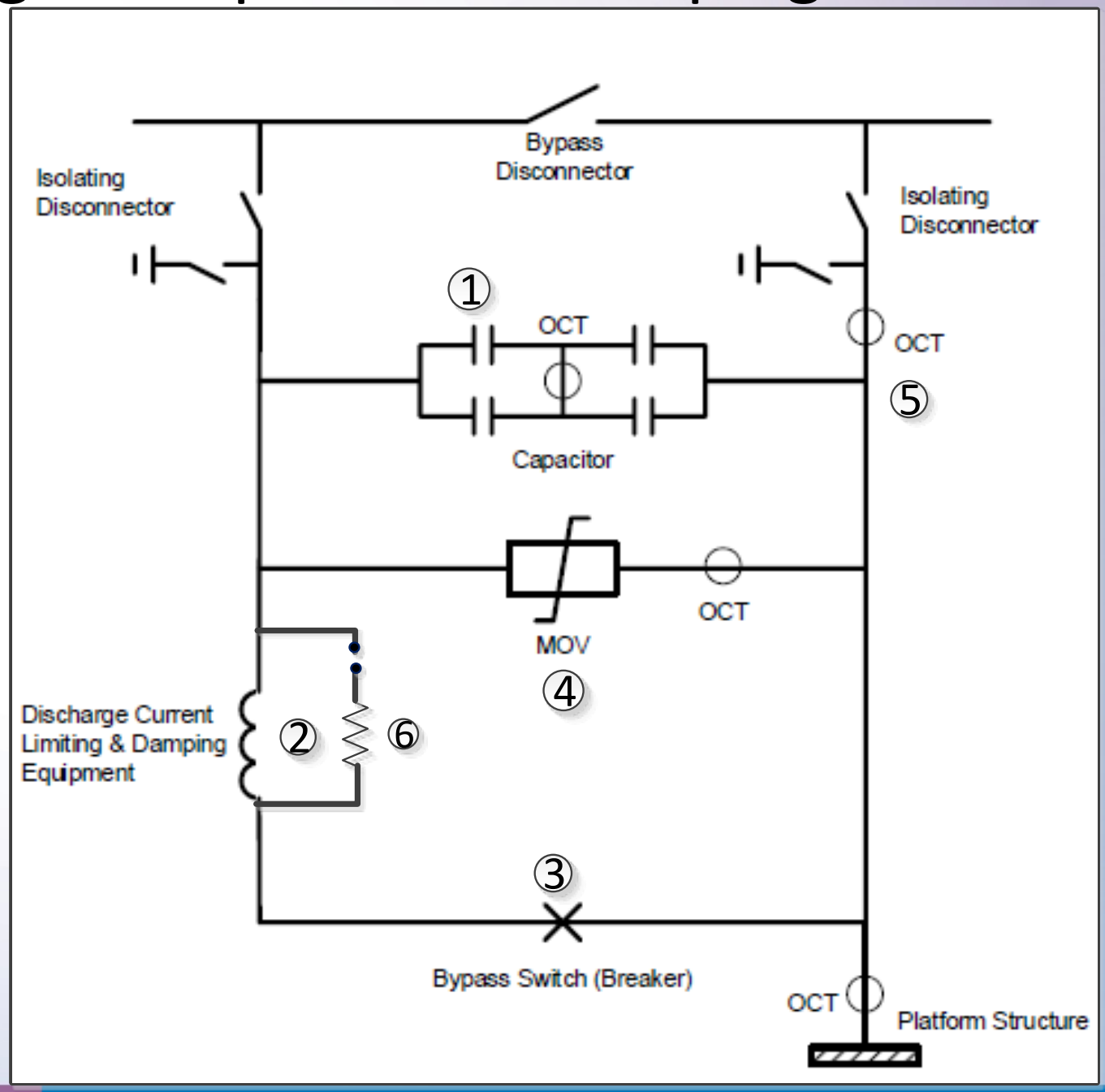

FSC Discharge Circuit

- Discharge Circuit with Damping Resistor

minnesota power
AN ALLETE COMPANY

GREAT NORTHERN TRANSMISSION LINE

Transients – Validation Study Setup

- Selected five line arrester locations along GNTL after consultations with transmission line design
- All line arresters are rated 353 kV MCOV
- Arresters on the MMTP were not included in the model. They do not have noticeable impact on the transients observed
- Included a triggered gap in the FSC bypass time and also a delayed bypass time to simulate a gapless FSC design
- Included damping resistors in the FSC damping circuit
  - Damping resistors reduce (damp out) the oscillations very fast minimizing the effect on the switching transients
- The bypass time used for each fault clearing event was adjusted to bypass at a time when two of the phase voltages were near maximum values to model conditions that result in the highest transients

minnesota power
AN ALLETE COMPANY
GREAT NORTHERN TRANSMISSION LINE

Transients – Mitigated Values

- During normal system operation, highest transient observed was 2.3 per unit during the most controlling fault case and during a contingency (loss of a line arrester)

- Highest transient observed was 2.45 per unit during the most controlling fault case and during a contingency (loss of a line arrester)

- The mitigations allow Live-Line performance without the need for tower design modifications

Transients – Plot

- Voltage Plot Showing TOV after mitigation

  Peak Voltage of about 2.2 per unit

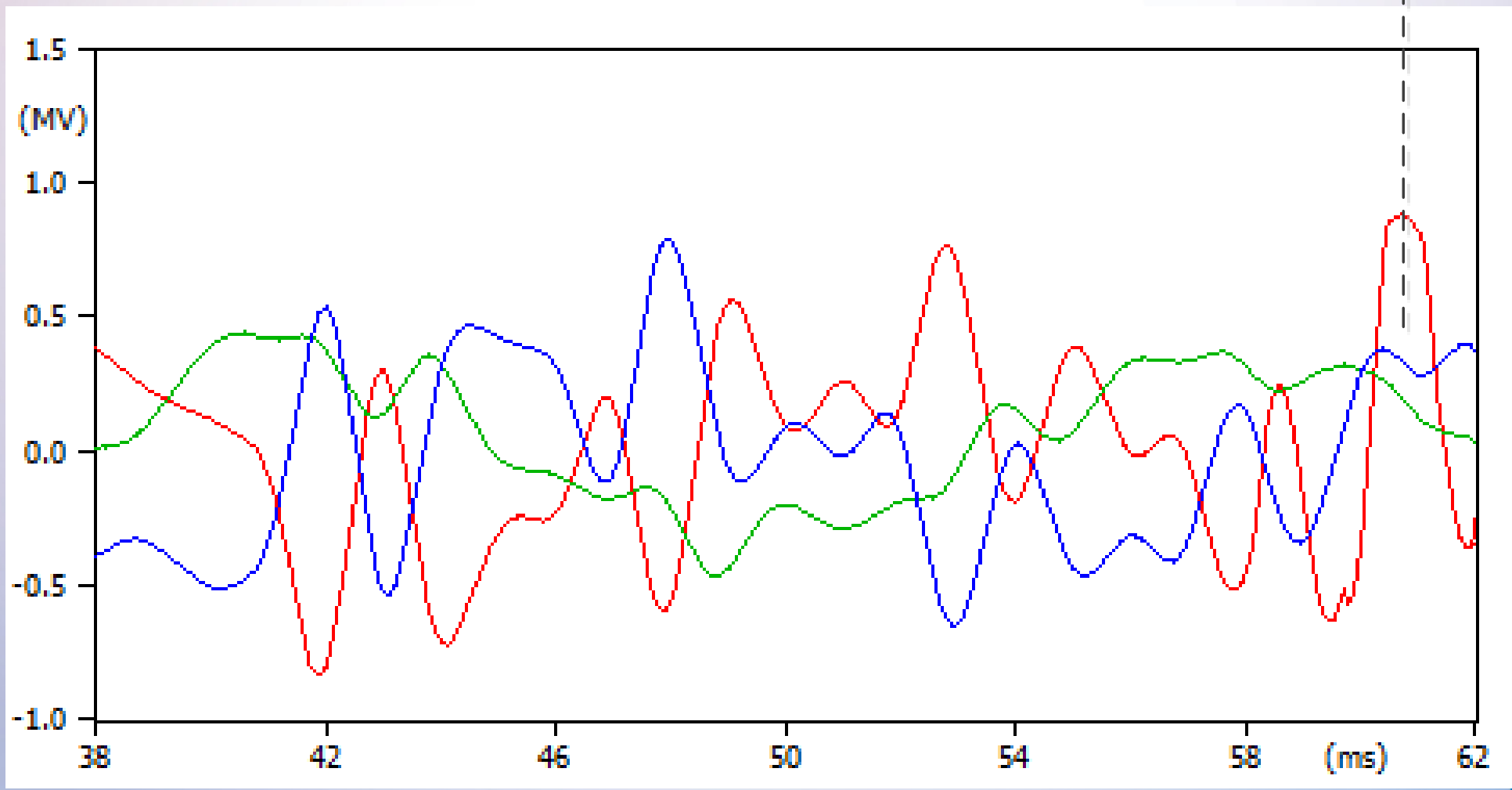

Transients – Plot

- Voltage Plot

Showing FSC discharge circuit with resistor

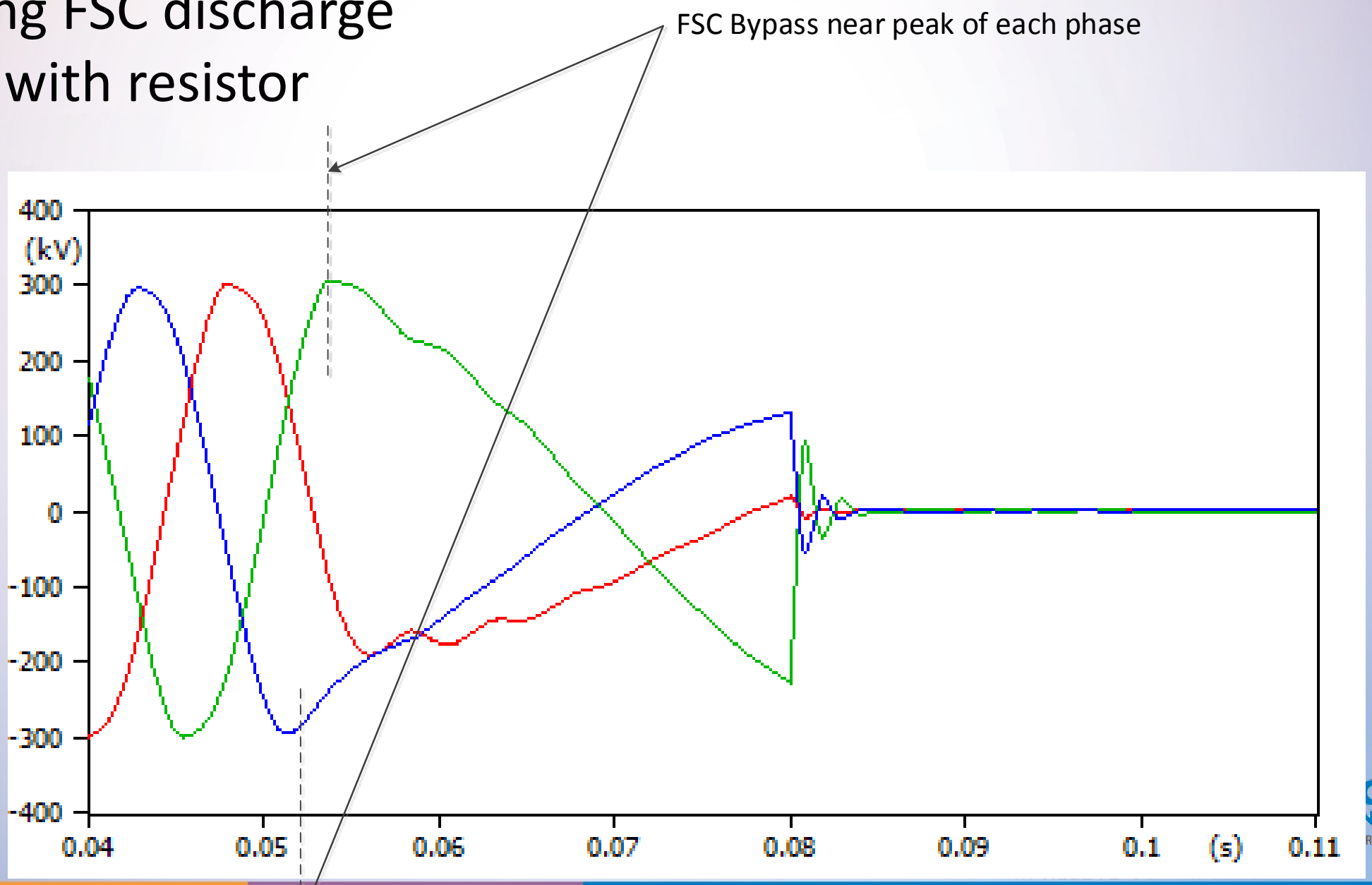

Transients – Plot

- Voltage Plot Showing FSC bypassed
- All line arresters intact

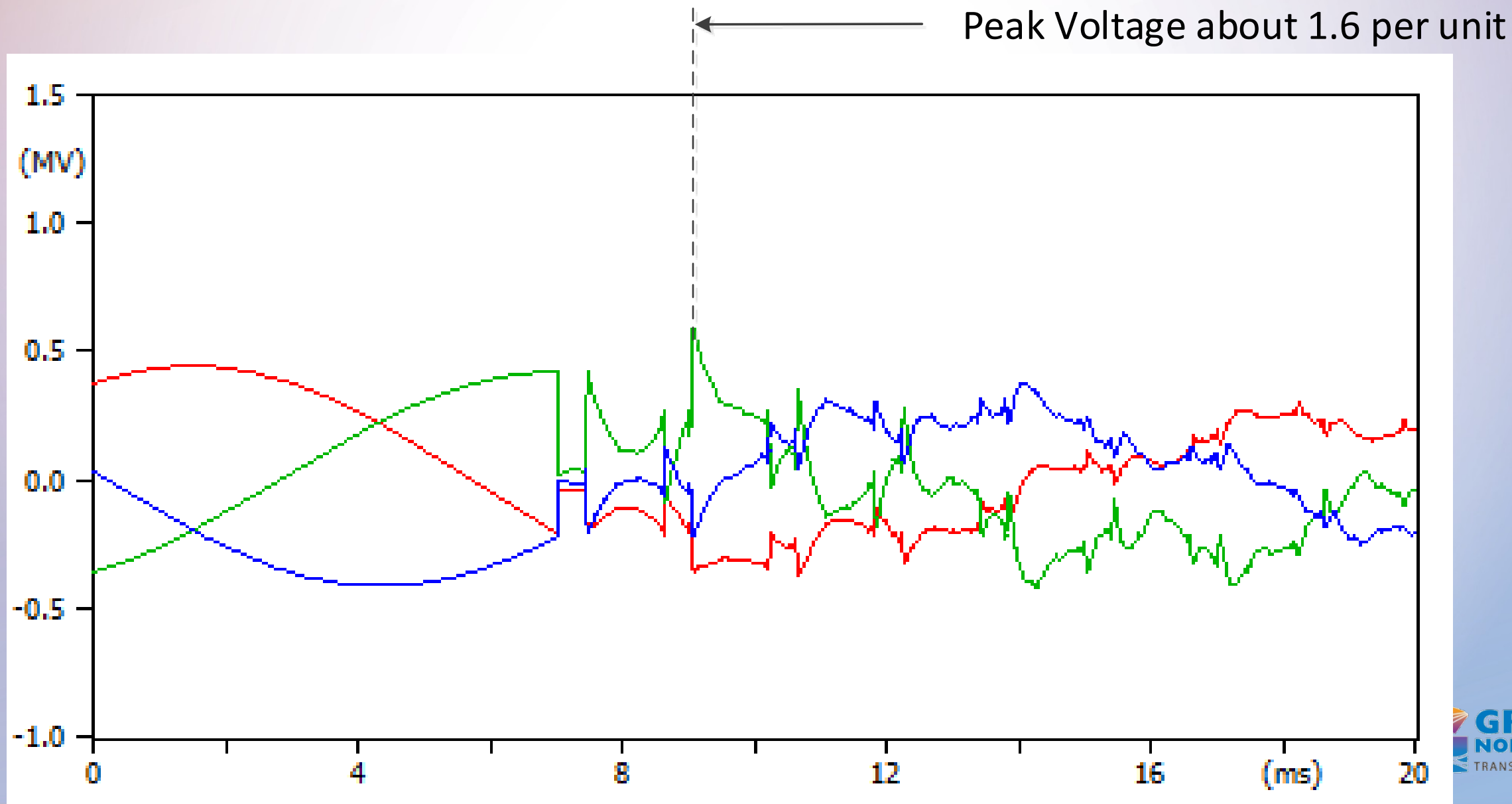

Summary of Design Considerations

- Limit transient overvoltage to 2.5 pu or less for adequate MADs (shown in yellow)

- Include 5 transmission line surge arrester locations on GNTL

- FSC Specification Considerations

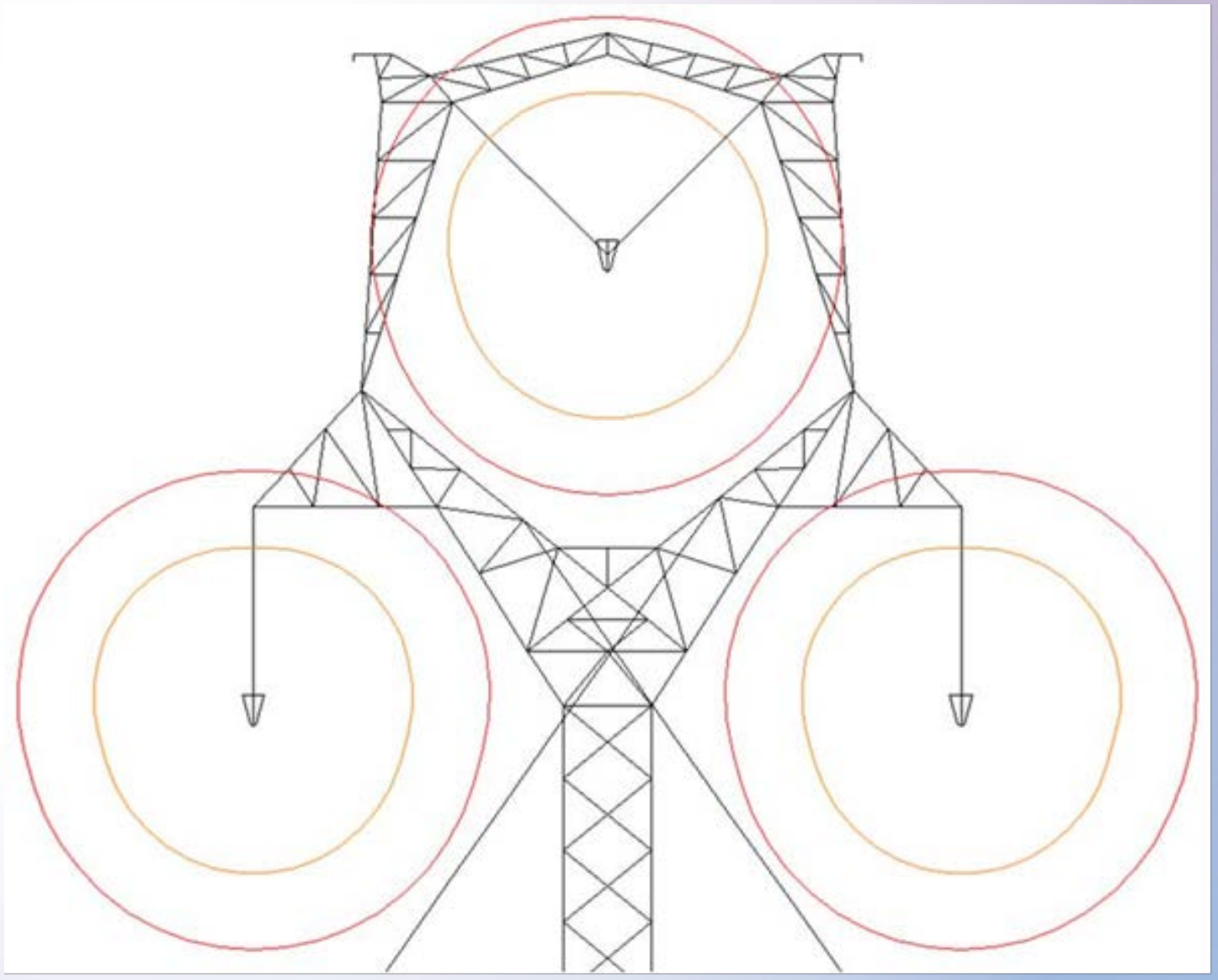

500 kV Transmission System

- System Layout (Final Design)

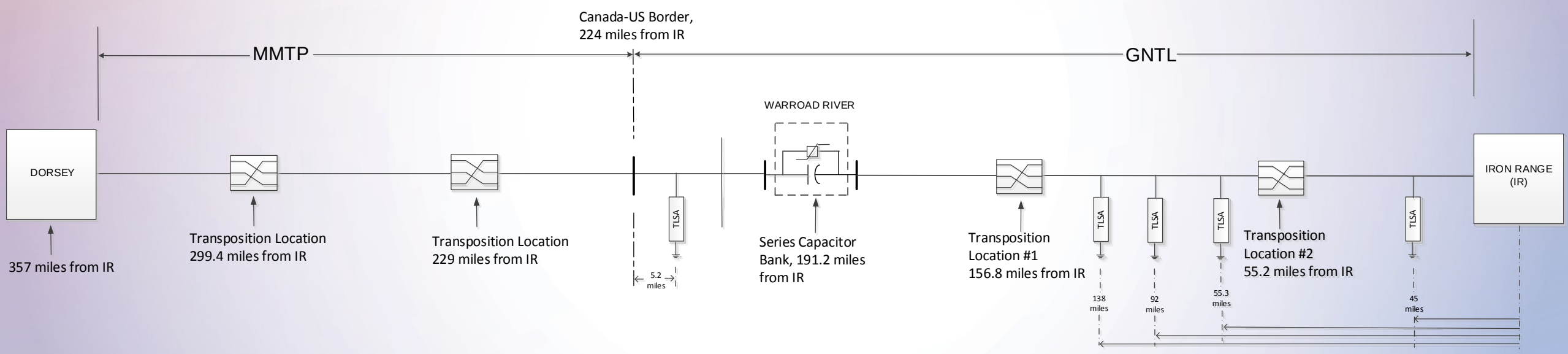

minnesota power
AN ALLETE COMPANY

GREAT NORTHERN
TRANSMISSION LINE

FSC Specification Considerations

- Allow FSC vendor to optimally design based on system requirements
- Minnesota Power to provide:
  - PSCAD Model & Fault Events
  - Performance Criteria (TOV, Breaker TRV)
- FSC Vendor to provide:
  - Alternative proposals for “Gapped” (Triggered Air Gap-based) and “Gapless” FSC design
  - FSC protection system design must not result in violations of Performance Criteria
- Minnesota Power will confirm Vendor design with independent time domain studies

Other MAD Considerations

- No auto reclosing while live line work is being performed
- The TLSAs on either side of the work site (total of two TLSAs) are in service
- TLSA remote condition monitoring equipment

minnesota power
AN ALLETE COMPANY
GREAT NORTHERN TRANSMISSION LINE

QUESTIONS

minnesota power
AN ALLETE COMPANY

GREAT NORTHERN TRANSMISSION LINE