Solutions to Common Distribution Protection Challenges

Jeremy Blair, Greg Hataway, and Trevor Mattson, *Schweitzer Engineering Laboratories, Inc.*
2350 NE Hopkins Court, Pullman, WA 99163 USA, +1.509.332.1890

***Abstract*—This paper describes how modern digital recloser controls can use voltage detection, timers, and programmable recloser logic to accomplish the following:**

- **Detect a loss of source and block fast curves prior to inrush on re-energization.**
- **Reduce protection response time when reclosing to reduce repeated system stress.**
- **Detect conductor slap upstream caused by an in-section fault, and lock out early to prevent continued conductor slap and eventual lockout of the upstream protection.**
- **Detect the location of a fault in a noncommunicating loop scheme to prevent closing into a fault when attempting restoration.**

I. Introduction

The practice of protective relaying has long sought to accurately identify every possible type of fault that could occur in a protected apparatus and to provide the appropriate response. As the capabilities of protective relays have grown in the past few decades, we have seen new solutions and techniques applied to improve the speed, sensitivity, selectivity, security, and dependability of protection systems. Prior to these improvements, protection engineers often had to choose whether their systems would err on the side of security or dependability, or they might have to sacrifice selectivity in a low-risk system to ensure selectivity in a higher risk system. This has been especially true in the electric distribution system, where some types of misoperations have even gone unnoticed until recent years.

But as distribution utilities have expanded their supervisory control and data acquisition (SCADA) systems to encompass reclosers, voltage regulators, and capacitors on the feeder, they have begun to observe breaker and recloser operations that, in previous years, they only knew about if a customer called to report it. Even when customers call in to report such operations, they typically do not have very accurate details to help the utility troubleshoot mysterious blinks and voltage sags. The microprocessor relays employed by many utilities in their feeder breakers and reclosers are able to capture details of these operations that were previously unavailable.

II. Common Distribution Protection Challenges

As these misoperations are now becoming apparent and understood, the multitude of protective elements and customizable logic available in modern microprocessor-based feeder and recloser relays can be used to mitigate these misoperations, reduce protection response times, and improve upon existing distribution automation designs. While modern communications systems can provide many new solutions, this paper offers solutions where high-speed communication between relays is unavailable. The following distribution protection challenges are approached:

- Unnecessary fast-curve operations during reclose or energization.
- Slow protection times on reclose caused by coordination of multiple devices in series.
- Premature lockout of upstream protection due to conductor slap.
- Closure into a faulted line section in noncommunicating loop schemes.

A. Eliminate Unnecessary Fast-Curve Operations

1) Background

A typical radial distribution system is shown in Fig. 1. The feeder starts at the feeder breaker located inside the substation. The feeder breaker relay typically uses overcurrent and time-overcurrent elements to identify faults on the feeder downstream and to trip the feeder breaker, protecting the conductor from further damage due to through-fault energy and isolating the faulted system from the rest of the distribution bus. Utility distribution feeders are typically built in narrower right-of-way and with a lower basic insulation level than transmission lines, and they are therefore exposed to more momentary fault types, such as falling vegetation and flashover due to nearby lightning strikes. In fact, [1] estimates some 80 to 90 percent of faults on overhead distribution systems to be momentary. Therefore, it is common practice to automatically reclose the breaker after it has tripped and remained open for a short period of time, typically 1 to 5 seconds. In some cases, utilities may reclose up to three times.

Sometimes reclosers—effectively, pole-mounted reclosing breakers with reclosing capability—are installed along the distribution feeder (locations labeled R in Fig. 1). These provide coverage for lower magnitude faults at the end of the feeder and reduce the number of customers affected by the interruption of faults on the downstream segments of the feeder.

In these systems, expulsion fuses are also used in several locations (F1, F2, F3, and F4 in Fig. 1) to isolate faulted branches of a feeder from the trunk or from the rest of a larger lateral. Expulsion fuses offer a predictable time-overcurrent characteristic and are inexpensive to install compared to

reclosers, offering a balance between cost and service continuity for smaller segments of the distribution system. The primary drawback to the use of expulsion fuses is that the fusible element must be replaced after every fault interruption, resulting in extended outages even for momentary faults.

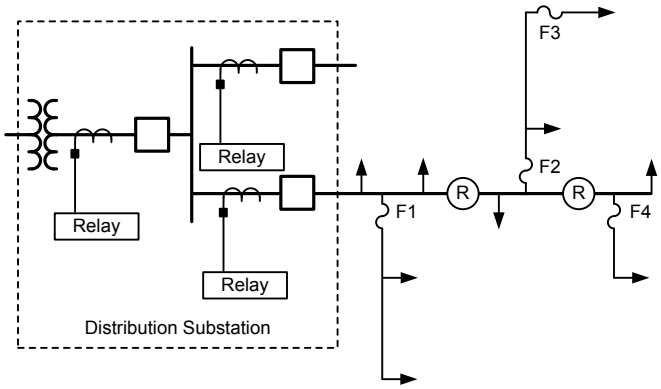

Fig. 1. Typical Overhead Distribution System

Because these extended outages for momentary faults are an inconvenience to the utility's customers and result in additional man-hours for the utility, there is a motivation to clear these momentary faults and restore service automatically. Many utilities operate with a fuse-saving philosophy by enabling a high-speed time-overcurrent element, often referred to as the fast curve, in their feeder breaker relays and recloser controls to trip for the first (and sometimes the second) detection of the fault. The goal is to interrupt the fault before the fusible element in an expulsion fuse begins to melt and then reclose to restore service. When the recloser or breaker closes, the relay then reverts to a slower time-overcurrent element, often referred to as the slow curve, which is coordinated to time-out after the downstream fuse has had a chance to melt and clear. If the fault is permanent, the fuse then melts and clears the fault before the recloser trips on its slow curve, leaving the rest of the feeder in service. Fig. 2 demonstrates this coordination.

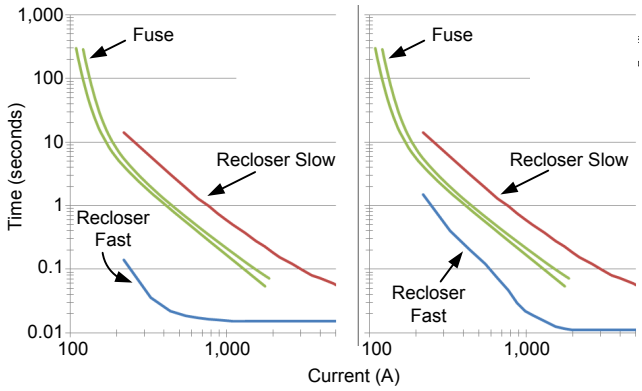

Fig. 2. Examples of Fuse-Saving Time-Overcurrent Coordination

While this seems simple enough, the proper coordination of fast and slow curves with multiple downstream fuses dispersed along the feeder is no trivial task, as these fuses may have different minimum melting times and may all observe a different maximum fault current. As a result, some utilities operate with a fuse-blowing philosophy, such that any fault downstream of an expulsion fuse, momentary or permanent, results in that fuse clearing the fault. This results in a simpler protection system and has many benefits of its own. However, the merits of one philosophy versus the other are outside the scope of this paper.

In cases where an extremely fast curve or instantaneous element is used to overreach a fuse in such a scheme, it is well documented that such protection is insecure in the presence of inrush currents [2] [3]. Of the different classifications of inrush described in [2], the types of inrush that most threaten the security of a fast curve are the magnetizing inrush and the load inrush that results from energization of the feeder (or segments of the feeder) as numerous distribution transformers simultaneously demand magnetization and small motors restart automatically following a momentary outage. Because there may be many reclosing devices in series on a distribution feeder, there are many opportunities for a fast curve to misoperate on these types of inrush currents.

2) Solutions

The advent of digital recloser controls with event capture and live monitoring through SCADA has raised awareness of such misoperations, though they have always been present. Modern digital recloser controls offer the ability to fine-tune fast curve timing, often allowing just enough delay to ride through this inrush. Additional protection elements and custom logic can also be used to recognize these inrush conditions and block operation of the fast curve.

As can be seen in Fig. 2, the high-speed operation of the fast curve leaves little time for the passage of transient conditions that may exceed normal loading. In the left-hand plot, the popular A or 101 curve, shown as the recloser fast curve, results in a trip after only 1.5 cycles at 2 multiples of pickup, where pickup may be set as low as 1.5 times peak diversified load, leaving inadequate margin for inrush. Other fast curves are available that offer a slower response at lower multiples of pickup but that are still fast enough to overreach a downstream fuse. In the right-hand plot of Fig. 2, for example, the 4 or 106 curve is shown as the recloser fast curve.

One utility began noticing that, during a valid fuse-saving operation on one recloser, there seemed to be other reclosers that also tripped and reclosed. Fig. 3 illustrates this situation using event data captured from recloser controls that exhibited exactly this behavior. It is worth noting that there are gaps in the traces where no data were captured. These gaps are a result of the finite length of each record, and they do not indicate that current ceased to flow. Reclosers R1 and R2 are set to trip once on an A fast curve and then to use a B slow curve for two more operations upon reclose. A fault occurs downstream of the fuse shown in Fig. 3. R1 trips on a fast curve to overreach the fuse, and then it recloses 1 second later. When R1 closes, the inrush can be seen on both R1 and R2, and R2 trips one of its poles as a result of the inrush. R2 then recloses 1 second later, but neither R1 nor R2 trip. R1 does not trip in either case of re-energizing the feeder segments because it is operating on its slow curve for both cases. When R2 recloses, it also reverts to operation on its slow curve, and therefore it does not trip during the inrush.

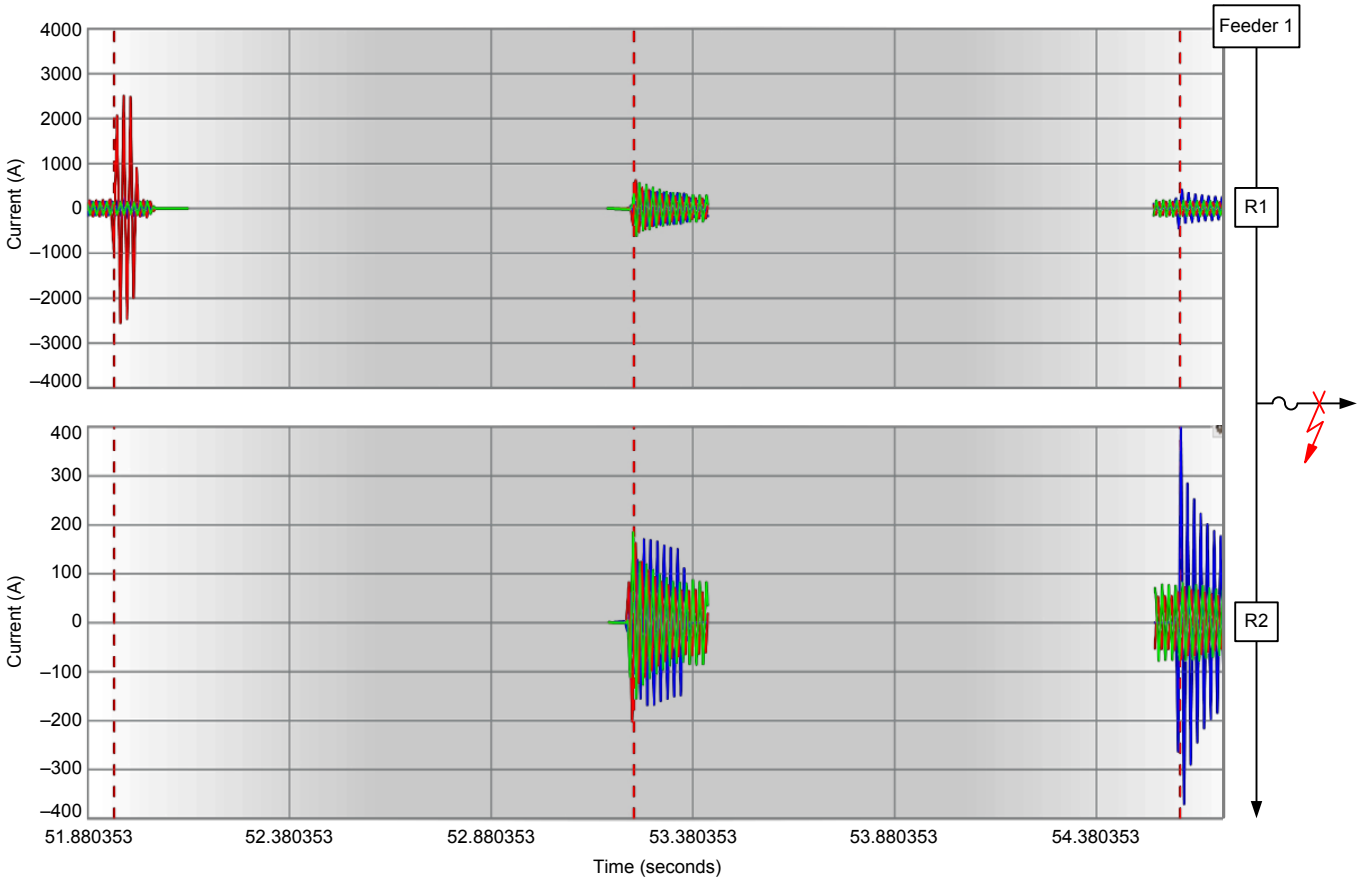

Fig. 3. R2 Trips on Inrush When R1 Recloses

For this particular utility, a solution was developed using the available voltage elements and custom logic in the recloser control. Upon loss of voltage on any one phase, as detected by the 27A2, 27B2, or 27C2 elements in Fig. 4, if there is no simultaneous overcurrent, the fast curve is disabled and the condition is sealed in by disabling the overcurrent detector (50P4) used in the logic. This utility had also collected several event reports from previous operations on inrush and had determined empirically that the high-magnitude transformer magnetizing inrush was fully decayed within 5 to 8 cycles on their system. This fast-curve blocking logic then is also held in for a minimum of 10 cycles, regardless of the seal-in. Once source voltage is restored and the 10-cycle dropout timer expires, fast curves are reinstated and the overcurrent detector is re-enabled in preparation for the next voltage sag or interruption. Should a fault occur downstream of the recloser, the overcurrent detector asserts before the undervoltage elements and prevents the input of the timer from picking up. The pickup time of 0.25 cycle is very aggressive and is set so that sympathetic tripping conditions, as described in [4], can also be detected in order to block fast-curve operation. If this is not a concern, the pickup timer need only be set faster than the open interval of any upstream reclosing device.

Should a fault be present in the recloser's zone of protection when it is re-energized, the slow curve is unaffected by the logic shown in Fig. 4 and able to respond to the fault. One alternative to this implementation is to remove the seal-in such that fast curves are only blocked for 10 cycles following a loss of voltage, after which time they are re-enabled because an overcurrent condition is still present.

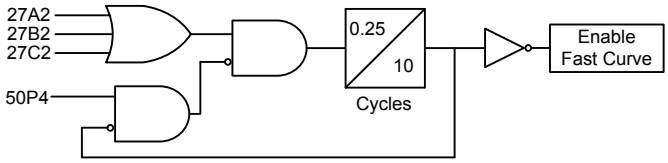

Fig. 4. Impending Inrush Detection Logic

There are two drawbacks to this solution. One is that voltage detection is required. This is not as onerous a requirement as it once was given that many recloser manufacturers now offer capacitive voltage sensors built into the bushings of the recloser. It may be harder to implement this solution on legacy recloser installations where voltage transformers may have to be installed. Care must be taken to ensure that voltage sensors or transformers are on the source side of the recloser; otherwise, when there is a fault downstream of the recloser, the logic is activated after the first trip, and subsequent fast curves are blocked.

Reference [3] presents yet another method that uses second harmonic detection to block fast-curve operation. Transformer magnetization currents are known to be rich in even harmonics due to asymmetry in the waveform. This has long been used to block or restrain transformer differential relays during energization of a protected transformer. Fig. 5 shows an example from [3] where the second harmonic content was sufficient to assert the second harmonic blocking element,

HBL2T, which was used to disable the 51P1 element (configured as the fast curve). Only the slow curve, 51P2, picked up and began timing, but it stopped timing once the magnitude of the filtered current fell below the minimum pickup.

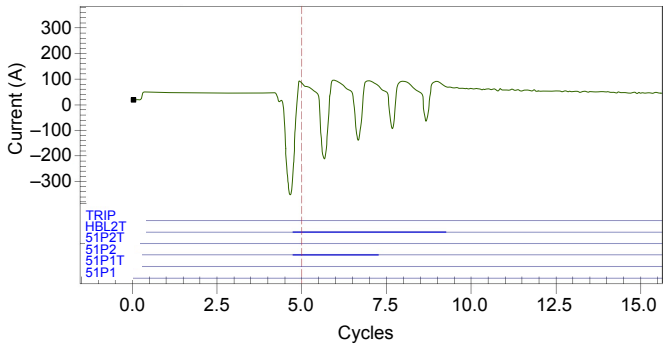

Fig. 5. Blocking Fast Curve on Inrush Using Second Harmonic Detection

In state-of-the-art recloser controls that offer this second harmonic blocking element, this is an ideal method because it does not rely on voltage, and it operates in real-time with the time-overcurrent elements rather than requiring a trigger beforehand. If the situation in Fig. 3 were reversed so that R2 operated first and then reclosed, R1 may have tripped on a fast curve due to inrush during R2's reclose. The impending inrush detection logic would not be able to prevent this because R1 was never de-energized, but the second harmonic blocking method would be able to prevent such a misoperation.

B. Reduce Time-Overcurrent Protection Times

1) Background

In radial distribution protection, time delay is not only used to ensure security for sensitively set overcurrent elements, but it is also used to establish selectivity because many protective devices in series may see the same fault current. Consider a fault downstream of fuse F2 in Fig. 1. The fault current is observed by the main breaker, the feeder breaker, and the first recloser. Inverse time-overcurrent curves offer a means of assigning unique time delays to each device for any given fault current, therefore establishing selectivity.

One downside to such a protection scheme, though, is that the closer a fault is to the source, the higher the time delay until the appropriate relay times out and issues a trip. As customers demand higher service availability, there is motivation for utilities to install more fuses and reclosers on their distribution feeders to reduce the number of customers exposed to prolonged outages. But coordinating more time-overcurrent devices in series may require further increase in time delays on devices closer to the source.

A classic case is demonstrated in Fig. 6. In this example, a feeder exists with only fuses downstream. In the left-hand time current curve (TCC) plot, the largest fuse used is a 100T, and it is shown to coordinate with the feeder relay at a coordination interval of about 0.2 seconds. Desiring to improve feeder segmentation, the utility installs a recloser between the feeder breaker and the largest fuse, as shown in the right-hand TCC plot. Although the utility desires a coordination interval of at least 0.2 seconds between the recloser and the feeder breaker relay, there clearly is not enough time delay in the existing feeder breaker settings to maintain coordination.

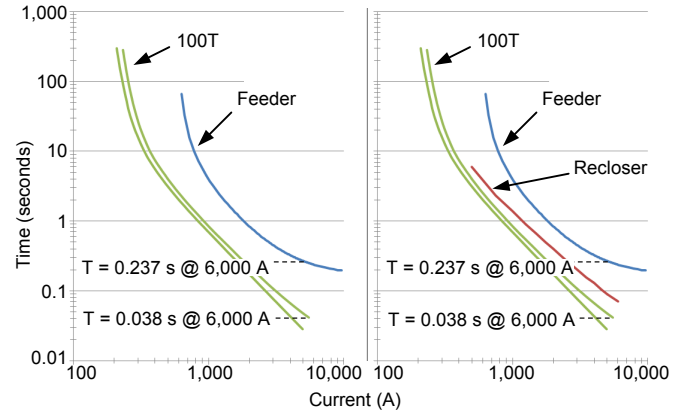

Fig. 6. Coordination Interval Compromised by Addition of Recloser

2) Solutions

The simplest solution is to increase the time dial setting on the feeder relay. But this would allow close-in faults to persist longer than they already do, allowing more stress on the station transformer and feeder conductor, prolonging the voltage sag observed by other customers. It is undesirable to improve feeder segmentation at the expense of adequate protection and power quality.

In some cases, coordination with upstream protection may not allow for the feeder relay's time to be increased. Alternatively, the recloser's time dial could be increased so that an adequate coordination interval might exist between the fuse and the recloser, but not between the recloser and the feeder relay. In this scenario, [5] offers a communications-based method of establishing selectivity between the recloser and the feeder regardless of the coordination interval between the two. However, this paper offers an additional solution for cases where high-speed communication between devices may not be available.

In Fig. 7, the recloser curve is set so that, for higher magnitude faults, the timeout begins to match that of the feeder relay curve. This ensures that any fault downstream of the fuse is cleared by the fuse with adequate coordination interval. However, if there is a high-magnitude fault between the recloser and the feeder, both the recloser and the feeder trip and reclose. While this does present a momentary outage to customers between the feeder and the recloser, it also provides the recloser with a very valuable piece of information: the fault is not located beyond any properly coordinated downstream fuse. Knowing this, the recloser can use a faster curve on subsequent reclose operations (as shown in the right-hand TCC plot of Fig. 7) that provides an adequate coordination interval with the feeder relay. If the recloser does not trip again and resets its shot counter, the slower curve can be restored to service.

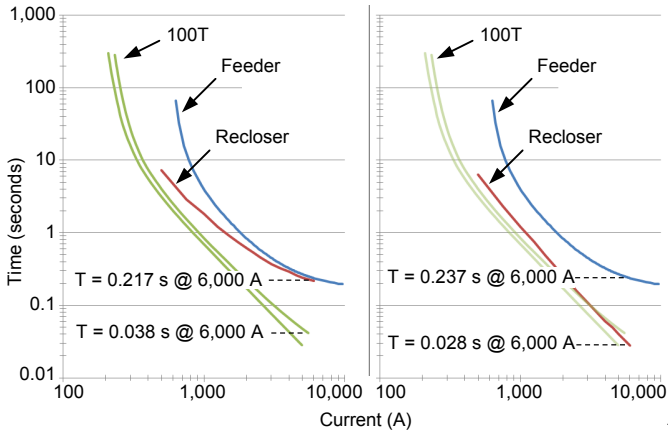

Fig. 7. Dynamic Recloser Curves on Initial Trip (Left) and on Reclose (Right)

It is critical that the feeder breaker not be allowed to clear a fault beyond the recloser before the recloser control can issue a trip. The following considerations ensure that this does not occur:

- The feeder breaker may be carrying more load than the recloser, which may mean that it times its operation using a higher current than the recloser. This effect is negligible at the maximum available fault current but more pronounced for low-magnitude faults; therefore, it is advisable to leave as much coordination interval as possible between the curves near their pickups.
- At high-fault current magnitudes, the relay timing error must still be considered to ensure that under the worst case error, the recloser always issues a trip before the feeder breaker clears the fault. A popular distribution feeder relay publishes curve timing accuracy of ±1.5 cycles (25 ms at 60 Hz) ±3 percent of the set time delay. Using this specification, the worst case actual timeouts are calculated as follows for the recloser relay and the feeder relay, respectively.

$$T_{recloser,max} = 0.217\ s \bullet 1.03 + 0.025\ s = 0.248\ s \quad (1)$$

$$T_{feeder,min} = 0.237\ s \bullet 0.97 - 0.025\ s = 0.205\ s \quad (2)$$

  Even though the recloser curve is slightly faster than the feeder relay curve, when worst case errors are considered, it is still possible with these curves for the feeder relay to issue a trip before the recloser does. However, the mechanical delay of the breaker (typically 50 ms or greater for distribution applications) would allow the recloser to continue observing the fault current until it trips as well.
- This scheme can be applied to multiple reclosers in series. The only additional concern is that the recloser curves must have an adequate coordination interval between them on the subsequent recloses in order to establish selectivity within the zones of protection covered by the reclosers.

The overall concept is that once a time-overcurrent device trips in a properly coordinated system, the fault is known to be in this device's protective zone, and not beyond any downstream time-overcurrent devices. Therefore, upon reclose, it is not necessary for this device to coordinate with downstream time-overcurrent devices. This same concept can be applied as a means of simply reducing unnecessary delays in protective tripping to improve system power quality and reduce system stresses.

Fig. 8 demonstrates a recloser curve appropriate for this application. Note that the selected recloser curve does offer a significant time delay between 1 and 1.5 multiples of pickup. With a pickup high enough above normal load, this allows for inrush to occur on reclose and subside before timing out, while offering high-speed clearance for high-magnitude faults. This can also be realized by simply enabling an instantaneous overcurrent element on the reclose, in which case the pickup of the instantaneous overcurrent can be set as high as necessary to allow for inrush to occur and subside. Alternatively, either method could be supervised by a second harmonic block, as discussed in the previous section.

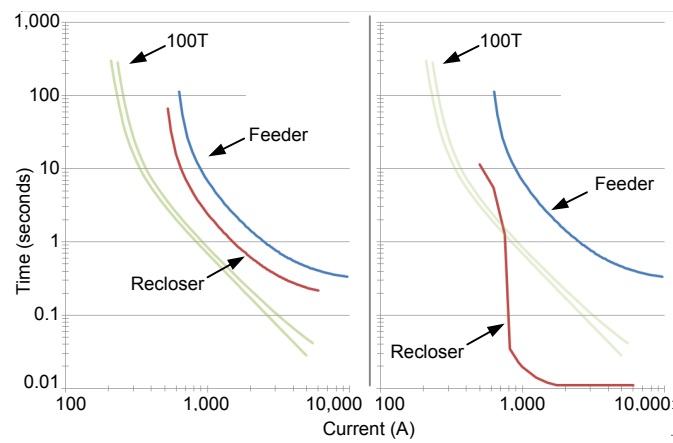

Fig. 8. Use of a Slow Curve for Initial Trip (Left) and a Faster Curve on Reclose (Right)

C. Prevent Feeder Breaker Lockout Due to Conductor Slap

1) Background

With more information available from modern microprocessor-based relays and recloser controls, utilities are finding out much more about their systems and identifying significant problems that may have gone undetected using older technology. Relays and controls are more likely now to be connected to a common time source and report back to SCADA.

Using accurately time-stamped event data, some utilities have become more aware that an initial fault downstream on a radial system can result in a subsequent fault back toward the source. An example of this type of review is shown in the appendix. Reference [6] explains how the initial fault can subject upstream conductors to such high currents that the resulting electromagnetic fields generate mechanical forces on these conductors. Sometimes the resulting movement can be significant enough that phase-to-phase contact (often called conductor slap) can occur, and in many such cases, the contact may be in the protective zone of an upstream device, leading the upstream device to trip in order to clear the fault. Tripping of the device farther downstream may or may not occur,

depending on settings, fault current levels, and timing of the conductor slap.

When the initial fault is permanent, conductor slap may be repeated on each reclose of the downstream device (i.e., device RCL in Fig. 9). In this scenario, the upstream device (FDR in Fig. 9) may also trip, reclose, and eventually trip to lock out, either along with the downstream device or in lieu of the downstream device. If sequence coordination is used on the upstream device, the likelihood of a premature lockout is exacerbated as the reclosing function may skip shots as the downstream device clears the initial fault on its fast curves.

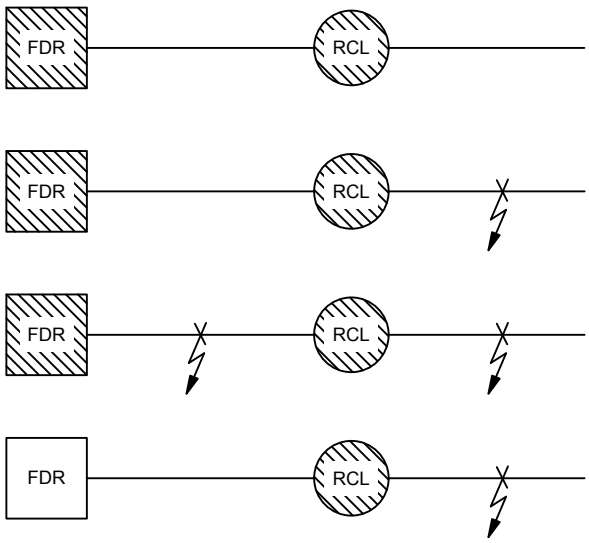

Fig. 9. Typical Feeder Arrangement Showing Permanent Fault Downstream of Recloser, Followed by Conductor Slap Upstream of Recloser

Such a scenario certainly results in unnecessary outages and may also result in longer outages if the wrong line section is patrolled for the apparent permanent fault. Consider the case demonstrated by Fig. 9 where the timing and fault conditions result in the upstream device operating to lock out, but the downstream device recloses after the feeder has been de-energized. In this situation, line crews may initially only inspect the protective zone of the upstream device, not realizing that the downstream device had ever tripped for the initial permanent fault. Additionally, if no information from the downstream device is available (as may be the case with hydraulic or legacy electronic reclosers), operators may inaccurately conclude that the downstream device had failed, leading to unnecessary testing or replacement of the equipment. Even when the root cause of the larger outage finally becomes apparent, the traditional solutions can be costly, and they typically involve reframing the circuit to increase the space between conductors or installing mid-span poles to reduce span length (and therefore, the available travel of the conductors).

2) Solution

Many recloser and control combinations used for downstream protection now offer three-phase voltage sensing in addition to the currents used for traditional overcurrent protection. By using voltage values from the source side of the recloser interrupters along with the current through the recloser, modern recloser controls can be programmed with available logic tools and functions to detect the situation described previously. Effectively, the control operates as a sectionalizer in parallel with its traditional overcurrent tripping functions.

In the absence of conductor slap or a second fault, the control trips and recloses the set number of times and goes to lockout for a permanent fault. But if conductor slap occurs and is cleared by the upstream device, the recloser control detects this condition by sensing a loss of source-side voltage after having sensed a previous overcurrent condition. After sensing a programmed number of these events, the recloser control is set to trip and lock out at least one operation prior to the upstream device going to lockout. This allows the upstream device to reclose and avoid an extended outage for customers upstream of the recloser. Meanwhile, the line section downstream of the recloser, where the initial fault occurred, is isolated from the rest of the feeder. Such logic is shown in Fig. 10.

Additionally, logic can be created to sense the condition—even for temporary faults that are cleared with one trip—and to reclose. This information can be used to alarm back to SCADA or display a message locally to alert responding personnel that the condition occurred so that they may look for potentially damaged conductors and consider any possible mitigation to prevent future occurrences.

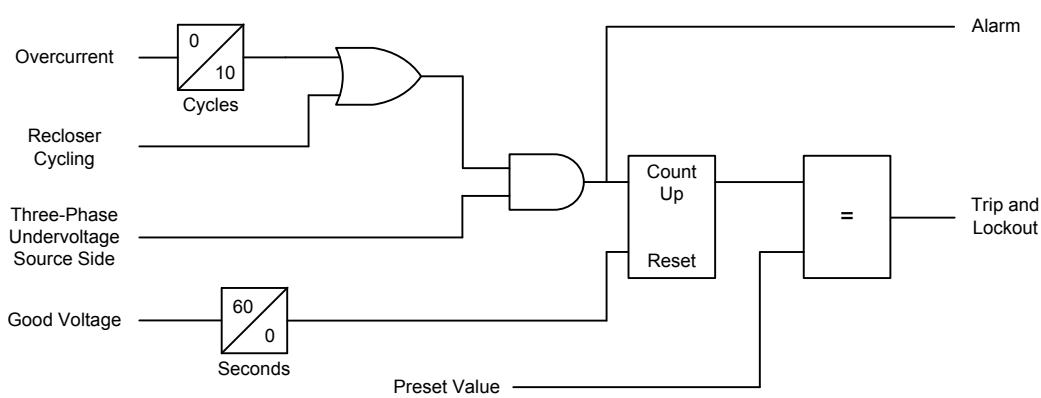

Fig. 10. Logic to Prevent Lockout of Upstream Protection Due to Conductor Slap

Another problem that looks very similar to the conductor slap problem is miscoordination of time-overcurrent devices. If not coordinated properly, an upstream device may trip simultaneously or in advance of the downstream device closest to the fault. The solution described previously would also respond to this scenario by tripping and locking out the downstream device before the upstream device trips to lockout. Typically, coordination between devices is studied carefully and miscoordination should be rare. However, as utilities seek to further sectionalize their feeders, more devices are being added in series and coordination intervals are being minimized, leaving little margin for variations in loading or available fault current that may not have been accounted for in previous studies.

D. Prevent Restoration of Faulted Lines in Noncommunicating Loop Schemes

1) Background

Providing excellent reliability and continuity of service has always been a priority of utilities. Feeders were often designed with switches installed at sectionalizing points and at tie points with other feeders so that, following a permanent fault, the faulted line section could be isolated manually and unaffected sections restored by closing a normally open tie point. With the switches, restoration steps were taken manually with personnel traveling from switch to switch in order to perform the operation.

When SCADA and motor operators became available for pole-top switches, many utilities employed this technology to reduce restoration time by performing the manual operations remotely. As microprocessor devices advanced, the capability for automatic restoration became available, requiring no immediate operator intervention.

Such early schemes soon began to employ reclosers with advanced controls installed in place of the switches. In the absence of communication between these devices, they were programmed to work autonomously to sectionalize and restore the line sections following a permanent event. The operation of such a scheme is illustrated in Fig. 11. Following a lockout of the feeder breaker for a permanent fault on the section between the feeder breaker and midpoint recloser, the midpoint recloser opened on the time-qualified loss of voltage. After a longer time delay, ensuring the midpoint recloser had opened, the same loss of voltage triggered the normally open recloser to close, restoring service to the load on the unfaulted section.

For faults between the midpoint and the open point, however, the normally open recloser observed the same time-qualified loss of voltage; because of this, there was no way to identify the faulted line section in this noncommunicating design. For either situation, the normally open recloser still closed, attempting to restore service to the adjacent line section. The midpoint was, therefore, typically programmed to trip quickly should a fault be detected, but the effect was still observable as voltage sag and undue stress on the previously unaffected feeder. Given the advantage of the reduced outage times and improved reliability, this was often deemed an acceptable risk.

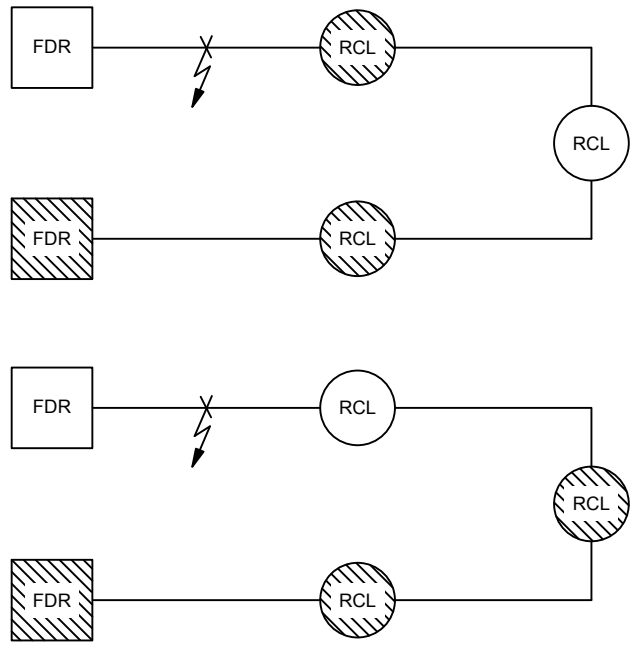

Fig. 11. Simple Three-Recloser Loop Scheme Showing Isolation of Faulted Section (Top) and Restoration of Healthy Section Through Tie-Point (Bottom)

2) Solution

Communication between devices offers the very best solution, allowing each device to inform adjacent devices of the condition of each zone of protection, and allowing several operational efficiencies such as enabling and disabling the entire scheme in concert. Fiber-optic cable and high-speed radios are becoming less expensive and easier to apply.

But there are still locations where new construction of fiber routes is not an option and wireless line of sight is unattainable on distribution structures. By taking advantage of custom logic available in modern microprocessor recloser controls, there is another method proposed here to identify the faulted line section and prevent the normally open recloser from attempting restoration of a faulted line section. In this proposed solution, communication between devices is achieved via the distribution system by varying one of the reclosing intervals for the different protection devices involved. In the simple three-recloser system shown in Fig. 11, one of the open intervals of the midpoint recloser can be changed to be distinctly different than the same open interval of the feeder breaker. The normally open recloser can then observe the duration of each loss of voltage during the reclose cycle and either restore the adjacent line section or stay open, depending on which line section is determined to be faulted.

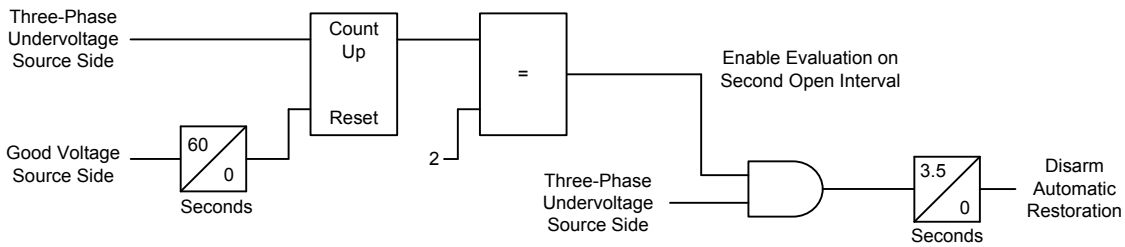

Fig. 12. Logic for Determination of Faulted Line Section to Supervise Restoration

Consider the system logic illustrated in Fig. 12, where the feeder breaker is set for a 0.5 second–3 second–10 second reclose sequence. If the midpoint recloser is set for a 0.5 second–5 second–10 second reclose sequence, the normally open recloser can be programmed to close only if it observes a loss of voltage on all three phases of a duration greater than 3 seconds (plus some margin).

Because the open interval timing is the means of communicating line section health to the normally open recloser, proper coordination between the feeder and midpoint recloser in this example is critical. The proper device must trip and reclose for each fault that may occur, and only this device may trip and reclose, or the open interval timing observed by the normally open recloser may be the result of overlapping open intervals from multiple devices.

III. Conclusion

Many outage types have been deemed acceptable on the distribution system because they were either unexplained or difficult to detect and prevent. But oscillography and sequence-of-event records from modern microprocessor-based relays and recloser controls give the distribution protection engineer unprecedented visibility into the root cause of these operations and the flexibility needed to solve these problems and reduce such nuisance operations.

Fuse-saving schemes employ high speed and high sensitivity at the expense of security during inrush. Second harmonic detection or custom logic to detect an impending inrush can be used to improve the security of these schemes.

Utilities continue to segment their distribution feeders in an effort to reduce the number of customers affected by any one fault. This puts coordination intervals between time-overcurrent devices at risk and affects the selectivity of the distribution protection system. Selectivity can be regained by dynamically adjusting the coordination during a reclose cycle based on the knowledge that the fault is in the protective zone of one of the devices that tripped for the fault.

Once a time-overcurrent device trips in a properly coordinated system, the fault has been identified as in-section or out-of-section, and upon reclose, the only question that remains is whether or not the fault is still there. This fact allows the use of fast or instantaneous overcurrent on subsequent recloses to reduce system stress due to through faults and to reduce the duration of voltage sags, improving power quality.

Permanent faults behind one protective device can lead to conductor slap upstream in another device's zone of protection. This can sometimes lead to the trip and lockout of the upstream device and an extended outage to customers upstream of the permanently faulted line section. Overcurrent and voltage detection can be combined to identify when conductor slap may be occurring upstream of a recloser already attempting to isolate a downstream fault. This knowledge can be used to trip the recloser and advance it to lockout before the upstream protection trips to lockout.

In noncommunicating loop schemes, normally closed devices can be set to use different open intervals for one of the shots in the reclose cycle. The normally open recloser can then appropriately determine which line section in the loop is faulted by measuring the duration of each open interval, and it can block restoration if the adjacent section is faulted.

IV. Appendix

This section provides an analysis of a specific conductor slap event.

As a utility in the southern United States began installing more points of sectionalization in their distribution feeders, they began to observe what initially appeared to be miscoordination of the new devices with the feeder breaker relay. But every time the time-overcurrent coordination was reviewed, there was adequate time separation between devices, and miscoordination seemed unlikely if not impossible. The introduction of microprocessor-based feeder relays and recloser controls gave this utility a better view into what was really occurring.

The event data shown in Fig. 13 were retrieved from a distribution feeder breaker microprocessor relay (bottom analog traces) and a downstream microprocessor recloser control (top analog traces) following an operation of the feeder breaker for a fault that was found downstream of a legacy electronic recloser location. Each time mark in the trace is numbered **1** through **7** in Fig. 13 for ease of reference through the analysis.

In both traces, notice that the initial fault at **1** is smaller in magnitude than all of the following captured events, and note that it is cleared quickly. About 300 ms later at **2**, both the feeder and recloser observe a phase-to-phase fault on different phases and of a higher magnitude: clearly not the same fault. Both the feeder relay and recloser control capture an event when this new fault begins, and the recloser captures an additional event at **3** when it trips for this fault.

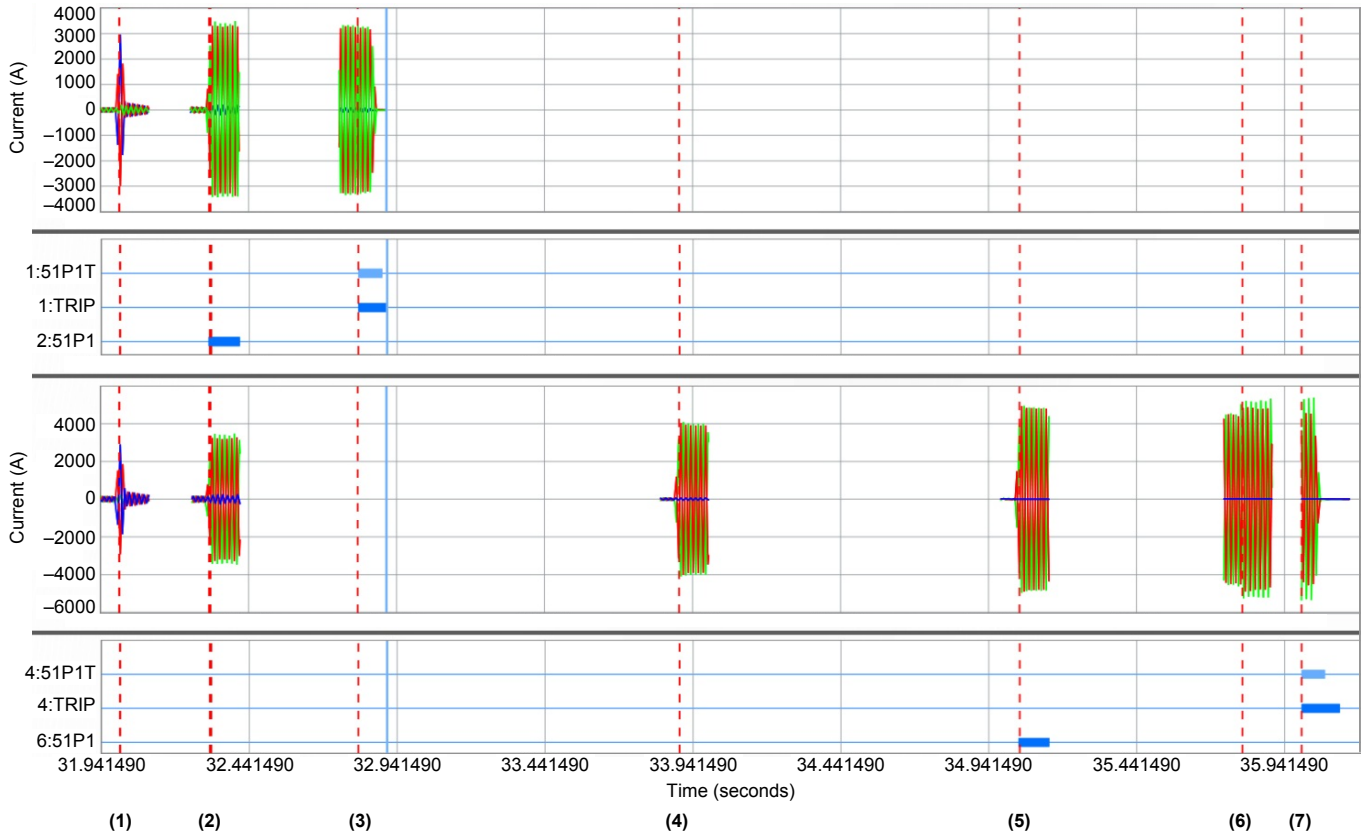

Fig. 13. Conductor Slap Event Seen by Feeder Breaker Relay (Lower Traces) and Downstream Recloser Control (Upper Traces)

The microprocessor recloser control that tripped at **3** is programmed with a 5-second open interval, so it is clearly open for the rest of this analysis, and the fault shown at **2** and **3** is clearly isolated.

Nearly 1 second after the microprocessor recloser control tripped at **3**, the feeder breaker relay observes yet another fault at **4**. This involves the same two phases, but it is visibly higher in magnitude, and as a phase-to-phase fault, it must therefore be closer to the substation than the previous faults. The fault current seen here eventually subsides before the feeder relay issues a trip on its 51P element.

Just over 1 second later at **5**, yet another fault begins, again on the same phases but even higher in magnitude and, therefore, even closer to the substation than the previous fault. Following this fault strike, the fault current stays present until the feeder relay issues a trip on the 51P element at **7**. However, it can be seen that while the conductor contact that began at **5** persists, yet another contact occurs at **6**, even closer to the substation.

Following the review of these events, it was determined that the two phases involved in each of the faults observed (other than the initial fault) were built on the same side of the distribution pole, and as such, their physical separation was limited. Furthermore, the utility ran a fault analysis on its feeder model to identify unique locations where the bolted phase-to-phase faults could occur that would generate the same magnitudes observed in these captured events. At those locations, fresh pitting and beading were found on the conductors, as in Fig. 14, proving that the conductors had in fact contacted each other at those locations.

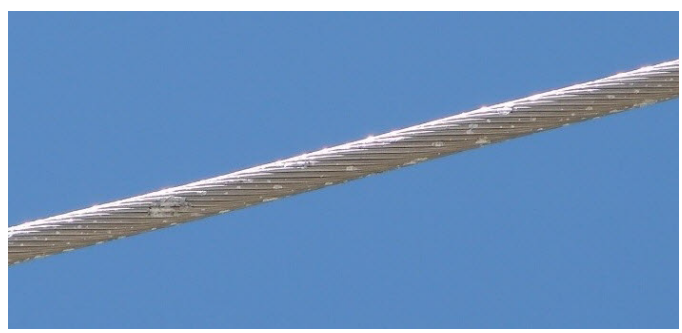

Fig. 14. Pitting and Beading on Conductor Following Phase-to-Phase Contact

V. Acknowledgment

The authors gratefully acknowledge the contributions of Bob Cheney and John Thorne at Alabama Power and Scott Summers of Entergy Services, Inc. for their work on this document.

VI. References

[1] J. L. Blackburn and T. J. Domin, *Protective Relaying: Principles and Applications*, 4th ed. Boca Raton: CRC Press, 2014.

[2] Working Group D1, "Cold Load Pickup Issues," a report to the Line Protection Subcommittee of the Power System Relay Committee of the IEEE Power Engineering Society, May 2008. Available: http://www.pes-psrc.org/Reports/Cold_Load_Pickup_Issues_Report.pdf.

[3] L. Wright and L. Ayers, "Mitigation of Undesired Operation of Recloser Controls Due to Distribution Line Inrush," proceedings of the 2015 IEEE Rural Electric Power Conference, Asheville, NC, April 2015.

[4] J. Roberts, T. L. Stulo, and A. Reyes, "Sympathetic Tripping Problem Analysis and Solutions," proceedings of the 24th Annual Western Protective Relay Conference, Spokane, WA, October 1997.

[5] J. Roberts and K. Zimmerman, "Trip and Restore Distribution Circuits at Transmission Speeds," proceedings of the 1999 IEEE Rural Electric Power Conference, Indianapolis, IN, May 1999.

[6] D. J. Ward, "Overhead Distribution Conductor Motion Due to Short-Circuit Forces," *IEEE Transactions on Power Delivery*, Vol. 18, Issue 4, October 2003.

VII. Biographies

Jeremy Blair, P.E., joined Schweitzer Engineering Laboratories, Inc. as an Application Engineer in 2013. Previously he worked for Entergy Corporation as a Distribution Planning Engineer with responsibilities in distribution system planning, protection, power quality, and automation in Baton Rouge, LA. He also managed Entergy's Automatic Load Transfer and Sectionalization Program over its four-state territory. Jeremy earned his B.S.E.E. from Louisiana Tech University and his M.S.E.C.E. from Georgia Institute of Technology. He is a licensed professional engineer in the state of Louisiana.

Greg Hataway received his B.S. in Electrical Engineering from the University of Alabama in 1991. He has broad experience in the field of power system operations and protection. Upon graduating, he served nearly 12 years at Alabama Electric Cooperative, now PowerSouth Energy Cooperative, where he worked in distribution, transmission, and substation protection before assuming the role of Superintendent of Technical Services at the cooperative. In this position, he coordinated the utility's efforts in protection and power quality. He joined Schweitzer Engineering Laboratories, Inc. (SEL) in 2002 as a Field Application Engineer in the southeast region. He returned to PowerSouth for a 3-year stint in 2009 with the position of Division Engineer in Power Delivery. He returned to SEL in 2012 and now holds the title of Senior Application Engineer. Greg is an IEEE member and is a registered professional engineer in the state of Alabama.

Trevor Mattson joined Schweitzer Engineering Laboratories, Inc. as a Power Engineer in 2014. His work involves the development and maintenance of digital relays and controllers. He was previously employed by Power Engineers, Inc. as a SCADA and Analytical Studies Engineer, tasked with developing control systems for industrial and utility applications as well as performing system studies. Trevor graduated from Washington State University with his B.S.E.E. in 2013 and is currently pursuing an M.E. of Electrical Engineering from the University of Idaho. Trevor is a member of the IEEE standards committee for transformers and holds several other volunteer positions within IEEE.

Previously presented at the 2016 Texas A&M
Conference for Protective Relay Engineers.

20160218 • TP6726